US009409072B2

(12) **United States Patent**
Staten et al.

(10) **Patent No.: US 9,409,072 B2**
(45) **Date of Patent: *Aug. 9, 2016**

(54) **FOOTBALL SLED WITH BLOCKER PAD RANGE OF MOTION**

(75) Inventors: **Kenneth E. Staten**, Clare, MI (US); **Grant Rogers**, Sanford, MI (US); **Jacob Rogers**, Sanford, MI (US); **Kyle R. Camp**, Clare, MI (US)

(73) Assignee: **Rogers Athletic Company, Inc.**, Clare, MI (US)

(*) Notice: Subject to any disclaimer, the term of this patent is extended or adjusted under 35 U.S.C. 154(b) by 1174 days.

This patent is subject to a terminal disclaimer.

(21) Appl. No.: **12/986,355**

(22) Filed: **Jan. 7, 2011**

(65) **Prior Publication Data**

US 2012/0157244 A1 Jun. 21, 2012

Related U.S. Application Data

(63) Continuation-in-part of application No. 12/971,160, filed on Dec. 17, 2010, and a continuation-in-part of application No. 12/971,183, filed on Dec. 17, 2010.

(51) **Int. Cl.**

A63B 69/00	(2006.01)
A63B 69/34	(2006.01)
A63B 21/00	(2006.01)
A63B 23/04	(2006.01)
A63B 71/00	(2006.01)
A63B 71/02	(2006.01)

(52) **U.S. Cl.**

CPC ***A63B 69/345*** (2013.01); ***A63B 21/0004*** (2013.01); ***A63B 21/4047*** (2015.10); ***A63B 23/047*** (2013.01); *A63B 2071/0063* (2013.01); *A63B 2071/026* (2013.01)

(58) **Field of Classification Search**

CPC A63B 69/34

USPC 473/465, 445, 444, 441, 415; 73/865.4; 463/4; 414/2; 273/350; 248/316.5; 206/523, 320, 192, 174

See application file for complete search history.

(56) **References Cited**

U.S. PATENT DOCUMENTS

1,427,532	A *	8/1922	Hambrock	248/316.5
2,237,599	A *	4/1941	Gilman	473/444
2,558,081	A *	6/1951	Gardenhour	473/445
3,087,630	A *	4/1963	Karnow et al.	414/590
3,329,428	A *	7/1967	Moran	473/441
3,827,690	A *	8/1974	Rogers	473/445
7,056,238	B1 *	6/2006	Brown	473/444
2002/0147061	A1 *	10/2002	Krause et al.	473/445
2006/0100040	A1 *	5/2006	Spencer	473/441
2008/0051228	A1 *	2/2008	Harmon et al.	473/445
2011/0152013	A1 *	6/2011	Staten et al.	473/445
2011/0152014	A1 *	6/2011	Staten et al.	473/445
2011/0263354	A1 *	10/2011	Rusch et al.	473/445
2012/0157244	A1 *	6/2012	Staten et al.	473/445

* cited by examiner

Primary Examiner — Gene Kim

Assistant Examiner — M Chambers

(74) *Attorney, Agent, or Firm* — Carlson, Gaskey & Olds, P.C.

(57) **ABSTRACT**

A blocking sled includes a sled frame, an arm mounted to said sled frame and a blocking pad having at least one handhold mounted to the arm.
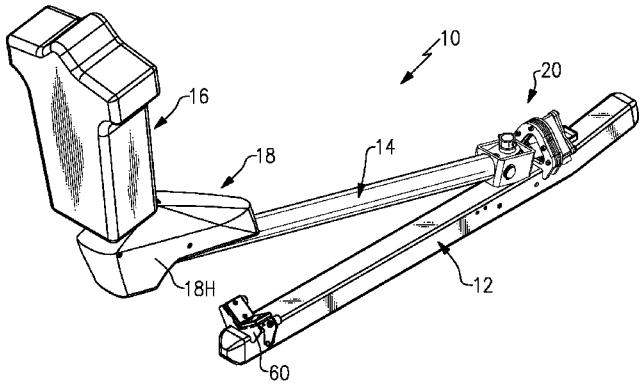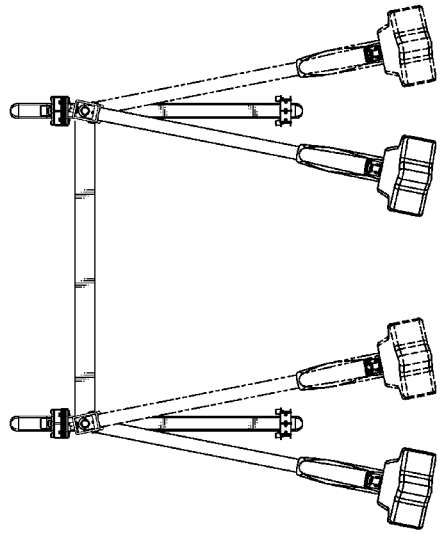
25 Claims, 9 Drawing Sheets