US005800372A

United States Patent [19]

Bell et al.

[11] Patent Number: 5,800,372

[45] Date of Patent: Sep. 1, 1998

[54] **FIELD DRESSING FOR CONTROL OF EXSANGUINATION**

[75] Inventors: **Eugene Bell**, 305 Commonwealth Ave., Boston, Mass. 02115; **Aslam A. Malik**, Cameron Park, Calif.; **Boris Nahlovsky**, Cameron Park, Calif.; **Marvin F. Young**, El Dorado Hills, Calif.

[73] Assignees: **Aerojet-General Corporation**, Rancho Cordova, Calif.; **Eugene Bell**, Boston, Mass.

[21] Appl. No.: **584,041**

[22] Filed: **Jan. 9, 1996**

[51] **Int. Cl.**[6] **A61F 13/00**

[52] **U.S. Cl.** **602/48**; 128/DIG. 8; 602/49; 424/447; 424/484

[58] **Field of Search** 424/443, 445, 424/484, 448, 447, 532, 487, 491, 494, 492; 602/48, 49; 604/304, 307; 128/DIG. 8

[56] **References Cited**

U.S. PATENT DOCUMENTS

5,056,510 10/1991 Gilman 602/52

Primary Examiner—Robert A. Clarke

Attorney, Agent, or Firm—Townsend and Townsend and Crew LLP

[57] **ABSTRACT**

Microfibrillar collagen and a superabsorbent polymer are combined in a hemostatic bandage which both absorbs blood and induces clotting.
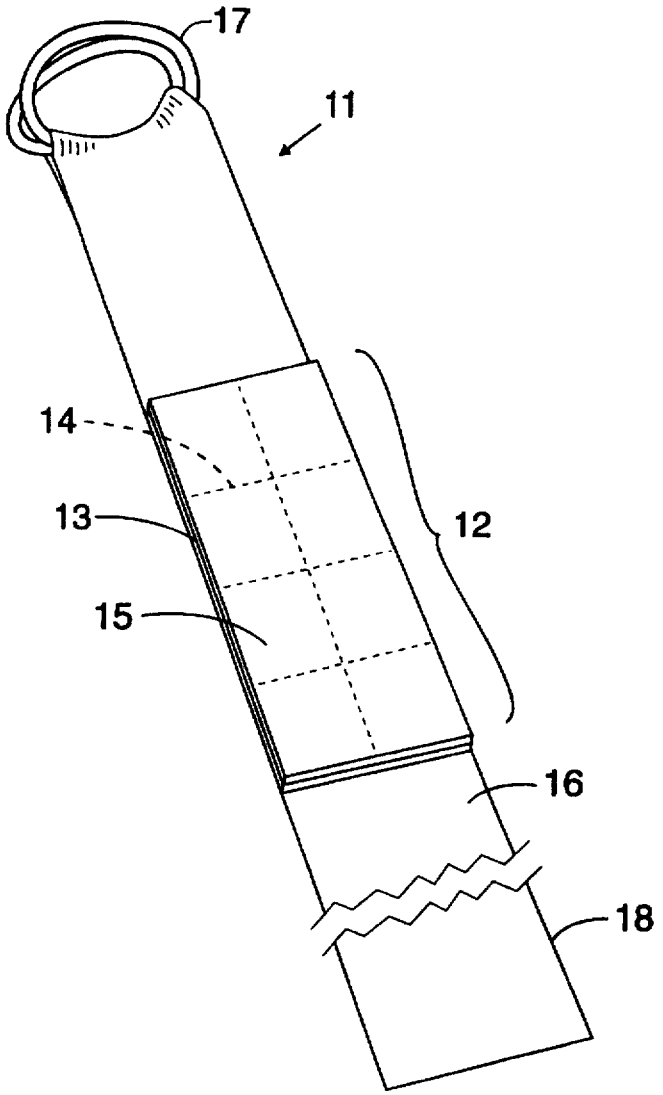
24 Claims, 2 Drawing Sheets