US005400072A

United States Patent [19]

Izumi et al.

[11] Patent Number: 5,400,072

[45] Date of Patent: Mar. 21, 1995

[54] **VIDEO CAMERA UNIT HAVING AN AIRTIGHT MOUNTING ARRANGEMENT FOR AN IMAGE SENSOR CHIP**

[75] Inventors: **Akiya Izumi; Iwao Takemoto; Hiroichi Sokei; Masahiko Kodowaki; Takamasa Naito; Hiroyoshi Kojima; Atsumu Iguchi; Masaaki Yokoyama,** all of Mobara; **Junichirou Nakajima,** Atsugi; **Masayuki Takahashi,** Fujisawa; **Kunio Niwa,** Ebina, all of Japan

[73] Assignees: **Hitachi, Ltd.,** Tokyo; **Echo Co., Ltd.,** Kanagawa, both of Japan

[21] Appl. No.: **480,979**

[22] Filed: **Feb. 16, 1990**

Related U.S. Application Data

[63] Continuation-in-part of Ser. No. 289,041, Dec. 23, 1988, abandoned.

[30] **Foreign Application Priority Data**

Mar. 17, 1989 [JP] Japan 1-63761
Jun. 28, 1989 [JP] Japan 1-163970

[51] **Int. Cl.**[6] **H04N 5/225**
[52] **U.S. Cl.** **348/335**
[58] **Field of Search** 358/209, 213.11, 225, 358/229; H04N 5/225, 5/335; 359/811, 815, 819, 821, 600; 348/207, 335, 340, 294, 311

[56] **References Cited**

U.S. PATENT DOCUMENTS

4,258,982	3/1981	Skinner et al.	359/819
4,303,306	12/1981	Ookawa	359/819
4,594,613	6/1986	Shinbori et al.	358/213.11
4,639,096	1/1987	Kitagishi et al.	359/686
4,734,778	3/1988	Kobayashi	358/229
4,810,076	3/1989	Murao et al.	359/738
4,896,217	1/1990	Hiyazawa	358/213.11

FOREIGN PATENT DOCUMENTS

48-64927	7/1973	Japan .	
56-152382	11/1981	Japan	H04N 5/30
60-87860	11/1986	Japan	H04N 5/225
3-276111	12/1991	Japan	G02B 7/02

Primary Examiner—Michael T. Razavi
Assistant Examiner—Tuan V. Ho
Attorney, Agent, or Firm—Antonelli, Terry, Stout & Kraus

[57] **ABSTRACT**

A video camera unit is separated into a holder for receiving lenses and a base on which a solid-state image pickup chip is mounted. The holder and the base are assembled together with the distance between them made variable so that it is possible to adjust the back focus of the lens. Further, a video camera unit has a holder which is separated into a first holder for receiving lenses and a second holder for receiving a solid-state image pickup device so that both holders can be assembled together with the distance between them made variable. Therefore, it is also possible to adjust the back focus of the lens.

20 Claims, 34 Drawing Sheets

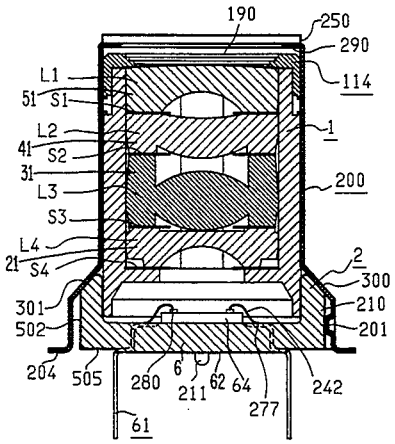

S1~S4--LIGHT SHIELD PLATE
L1~L4--PLASTIC LENS
1 --HOLDER
2 --BASE
6 4 --SOLID-STATE IMAGE SENSOR CHIP
114--LENS HOLDING COVER
200--SLEEVE
250--TRANSPARENT CAP