March 26, 1935. D. R. DOWLING 1,995,971

DRENCHING GUN

Filed Oct. 2, 1934

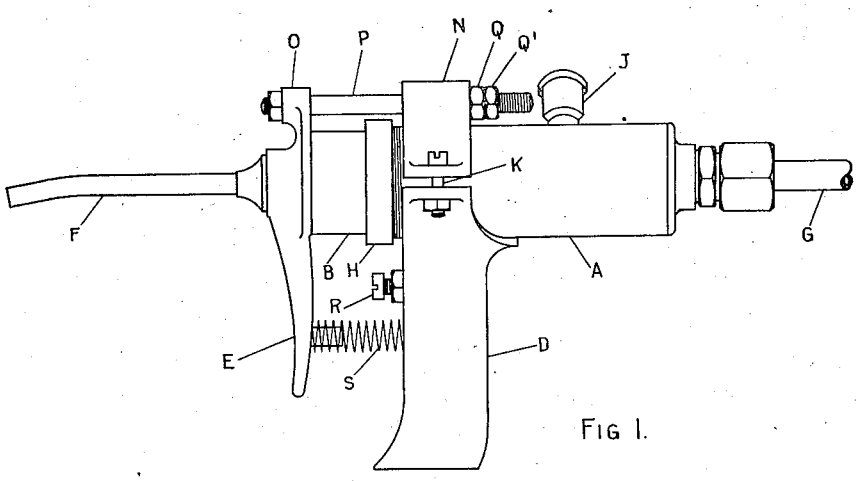

FIG 1.

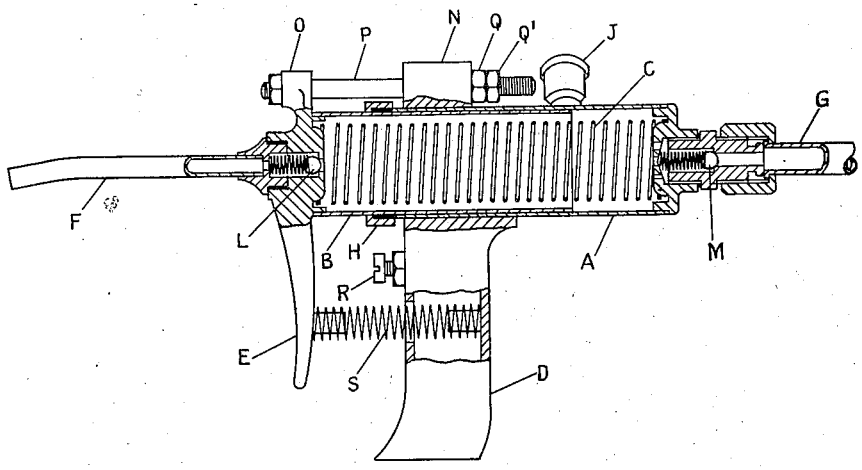

FIG 2.

Inventor:

Dudley Russell Dowling

By [signature]

Attorney