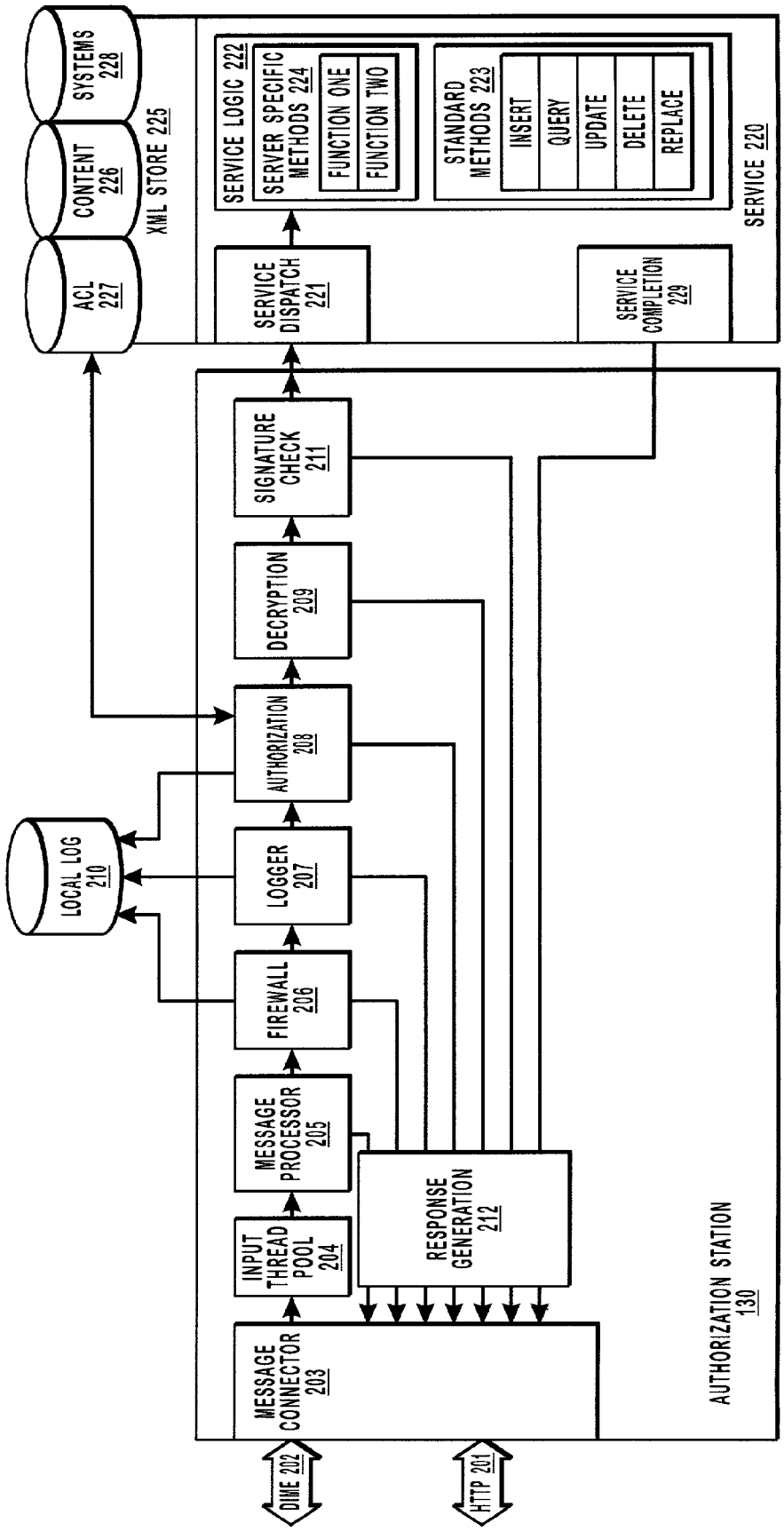
SYSTEMS 228
CONTENT 226
ACL 227
XML STORE 225
SERVICE LOGIC 222
SERVER SPECIFIC METHODS 224
FUNCTION ONE
FUNCTION TWO
STANDARD METHODS 223
INSERT
QUERY
UPDATE
DELETE
REPLACE
SERVICE 220
SERVICE DISPATCH 221
SERVICE COMPLETION 229
SIGNATURE CHECK 211
DECRYPTION 209
AUTHORIZATION 208
LOCAL LOG 210
LOGGER 207
FIREWALL 206
MESSAGE PROCESSOR 205
INPUT THREAD POOL 204
RESPONSE GENERATION 212
MESSAGE CONNECTOR 203
AUTHORIZATION STATION 130
DIME 202
HTTP 201

FIG. 2