US007182371B1

(12) **United States Patent**
Renzi

(10) **Patent No.: US 7,182,371 B1**
(45) **Date of Patent: *Feb. 27, 2007**

(54) **EDGE COMPRESSION MANIFOLD APPARATUS**

(75) Inventor: **Ronald F. Renzi**, Tracy, CA (US)

(73) Assignee: **Sandia National Laboratories**, Livermore, CA (US)

(*) Notice: Subject to any disclaimer, the term of this patent is extended or adjusted under 35 U.S.C. 154(b) by 0 days.

This patent is subject to a terminal disclaimer.

(21) Appl. No.: **10/999,828**

(22) Filed: **Nov. 30, 2004**

Related U.S. Application Data

(63) Continuation of application No. 10/350,628, filed on Jan. 24, 2003, now Pat. No. 6,832,787.

(51) **Int. Cl.**
F16L 39/00 (2006.01)

(52) **U.S. Cl.** **285/124.1**; 285/143.1

(58) **Field of Classification Search** 285/124.1, 285/124.2, 124.3, 124.4, 124.5, 143.1, 332.1
See application file for complete search history.

(56) **References Cited**

U.S. PATENT DOCUMENTS

3,677,577 A 7/1972 Krauer et al.
4,026,803 A * 5/1977 Abrahams et al. 210/198.2
4,089,549 A 5/1978 Vyse et al.
4,451,363 A * 5/1984 Brownlee et al. 210/198.2
4,792,396 A * 12/1988 Gundelfinger 210/198.2
4,915,419 A 4/1990 Smith, III
4,995,646 A 2/1991 Johnston et al.
5,209,525 A 5/1993 Ito
5,227,059 A * 7/1993 Shepherd 210/198.2
5,366,620 A 11/1994 Schick
5,419,208 A 5/1995 Schick
5,472,598 A 12/1995 Schick
5,482,628 A 1/1996 Schick
5,487,569 A 1/1996 Silvis et al.
5,494,641 A 2/1996 Krstanovic
5,534,152 A 7/1996 Schick
5,540,464 A 7/1996 Picha
5,644,395 A 7/1997 Folta
5,736,036 A 4/1998 Upchurch et al.
5,846,396 A 12/1998 Zanzucchi et al.
5,855,229 A 1/1999 Gluf, Jr.
5,865,474 A 2/1999 Takahashi
5,911,954 A * 6/1999 Ford et al. 422/101
5,987,735 A 11/1999 Horning et al.
5,988,703 A 11/1999 Craig

(Continued)

Primary Examiner—James M. Hewitt
(74) *Attorney, Agent, or Firm*—Cascio, Schmayer & Zervas

(57) **ABSTRACT**

A manifold for connecting external capillaries to the inlet and/or outlet ports of a microfluidic device for high pressure applications is provided. The fluid connector for coupling at least one fluid conduit to a corresponding port of a substrate that includes: (i) a manifold comprising one or more channels extending therethrough wherein each channel is at least partially threaded, (ii) one or more threaded ferrules each defining a bore extending therethrough with each ferrule supporting a fluid conduit wherein each ferrule is threaded into a channel of the manifold, (iii) a substrate having one or more ports on its upper surface wherein the substrate is positioned below the manifold so that the one or more ports is aligned with the one or more channels of the manifold, and (iv) device to apply an axial compressive force to the substrate to couple the one or more ports of the substrate to a corresponding proximal end of a fluid conduit.
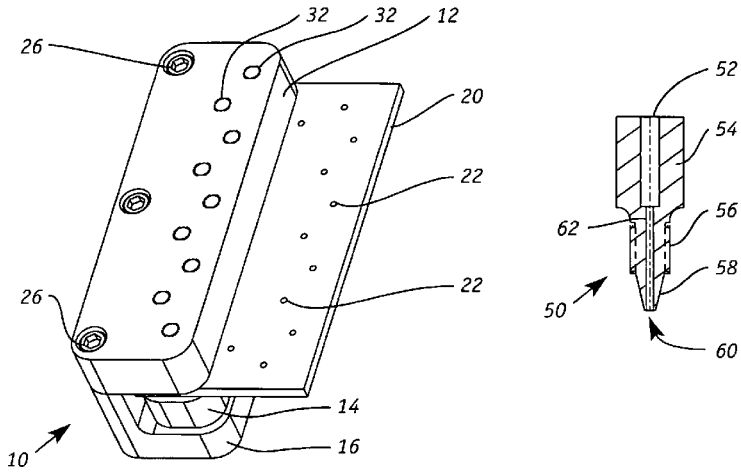
25 Claims, 2 Drawing Sheets