Dec. 2, 1969 L. D. SMITH 3,480,971

ARTIFICIAL EYES HAVING A CHANGEABLE PUPIL AND MOVABLE IRIS PORTION ACTUATED BY MUSCLE TISSUE

Filed Feb. 21, 1967 2 Sheets-Sheet 1

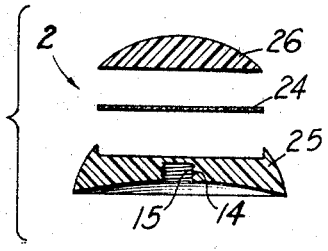

Fig I

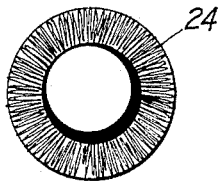

Fig II

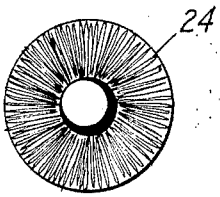

Fig III

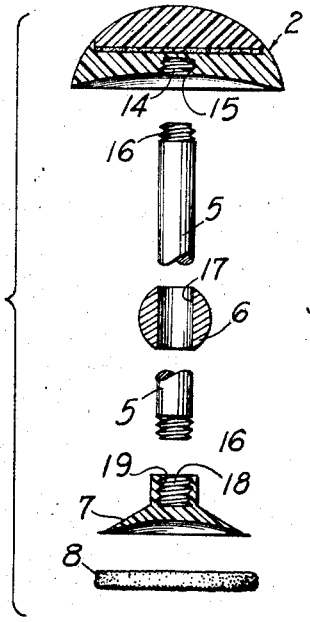

Fig IV

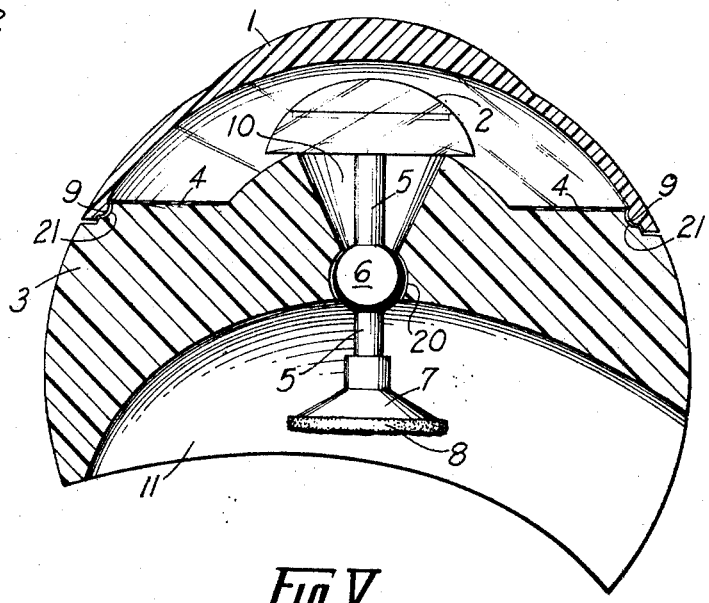

Fig V

INVENTOR
Leonard Donald Smith