Oct. 31, 1939. J. SOSS 2,178,271

CONCEALED HINGE

Filed Aug. 5, 1937

Fig. 1.

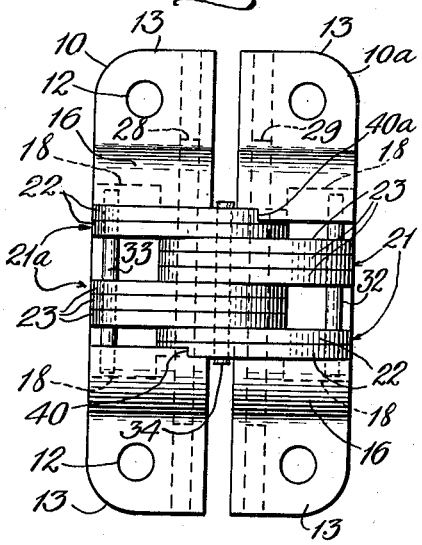

Fig. 2.

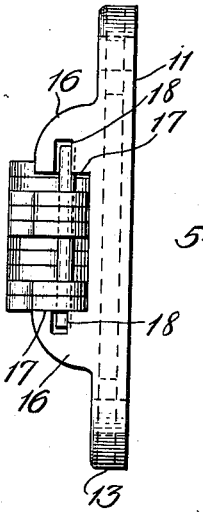

Fig. 3.

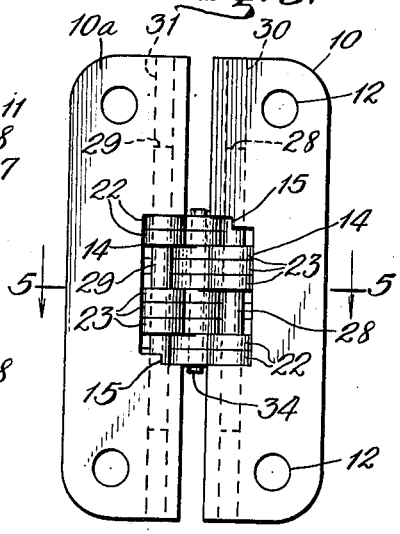

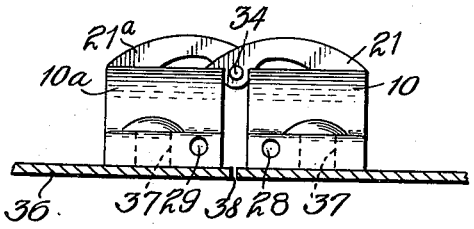

Fig. 4.

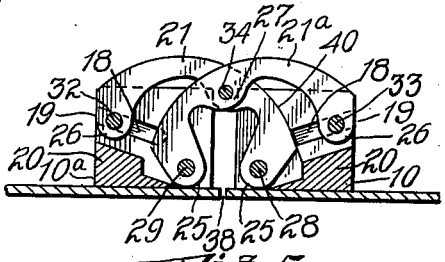

Fig. 5.

Fig. 6.

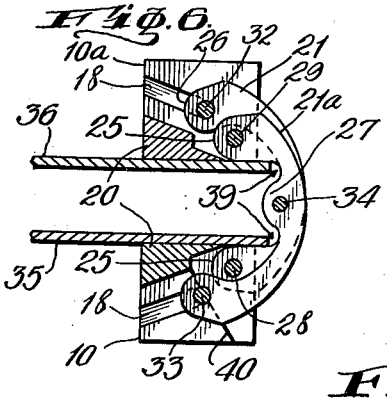

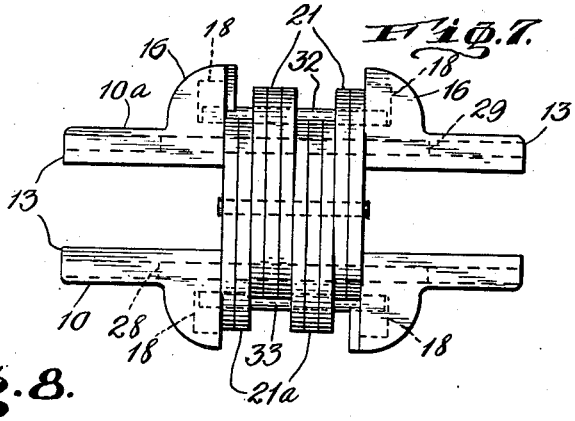

Fig. 7.

Fig. 8.

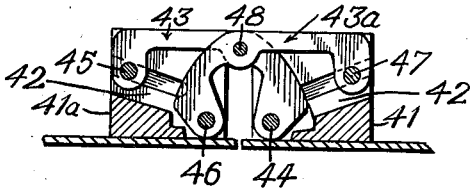

INVENTOR
JOSEPH SOSS
BY
Howard E. Thompson
ATTORNEY