US005570971A

United States Patent [19]

Rixen et al.

[11] **Patent Number: 5,570,971**

[45] **Date of Patent: Nov. 5, 1996**

[54] **CONNECTION BETWEEN COMPONENTS**

[76] Inventors: **Wolfgang Rixen**; **Gerrit Pies**, both of Friedenstrasse 107-109, D-42699 Solingen, Germany

[21] Appl. No.: **256,689**

[22] PCT Filed: **Jan. 20, 1993**

[86] PCT No.: **PCT/DE93/00043**

§ 371 Date: **Jul. 21, 1994**

§ 102(e) Date: **Jul. 21, 1994**

[87] PCT Pub. No.: **WO93/14280**

PCT Pub. Date: **Jul. 22, 1993**

[30] **Foreign Application Priority Data**

Jan. 21, 1992 [DE] Germany ..... 9200642 U

[51] **Int. Cl.**[6] **A47G 5/00**; F16C 11/00

[52] **U.S. Cl.** **403/381**; 52/71; 52/582.1; 52/589.1; 52/592.2; 52/592.4; 74/462; 160/135; 403/119; 403/364

[58] **Field of Search** 52/71, 582.1, 589.1, 52/592.1, 592.2, 592.4; 74/98, 462; 160/135, 199, 206, 229.1; 403/52, 119, 121, 364, 381; 24/399, 402, 525, 577

[56] **References Cited**

U.S. PATENT DOCUMENTS

64,757	5/1867	Garlinghouse	403/121
1,661,003	2/1928	Miller	160/229.1
2,142,305	1/1939	Davis	52/592.1
2,800,802	7/1957	Rentschler	74/462 X
3,092,870	6/1963	Baer	160/206 X
3,848,298	11/1974	Frohlich	24/399 X
4,047,337	9/1977	Bergstrom	52/71
4,112,782	9/1978	Mullins	74/462
4,148,163	4/1979	Chenin et al.	52/71
4,816,310	3/1989	Truyens	428/12
4,941,763	7/1990	Euteneuer	403/381 X
4,999,879	3/1991	Baer	16/354

FOREIGN PATENT DOCUMENTS

0109466	5/1984	European Pat. Off. .	
0292833	11/1988	European Pat. Off. .	
0325528	7/1989	European Pat. Off. .	
2649742	1/1991	France	160/351
2541209	3/1977	Germany .	
3118755	5/1982	Germany .	
495310	4/1938	United Kingdom .	
1381986	1/1975	United Kingdom .	
1590607	6/1981	United Kingdom .	
2277550	11/1994	United Kingdom	160/229.1
WO86/07111	12/1986	WIPO .	

Primary Examiner—Anthony Knight
Assistant Examiner—Andrea Chop
Attorney, Agent, or Firm—Herbert Dubno

[57] **ABSTRACT**

A connection assembly includes at least two components each formed with a body extending along a respective axis and a respective plurality of angularly equispaced alternating tongues projecting radially from the body and grooves for meshing with the tongues and grooves of the other component upon relative angular displacement of the components, so that the components are not able to be separated in a direction transverse to the axis upon the relative angular displacement.
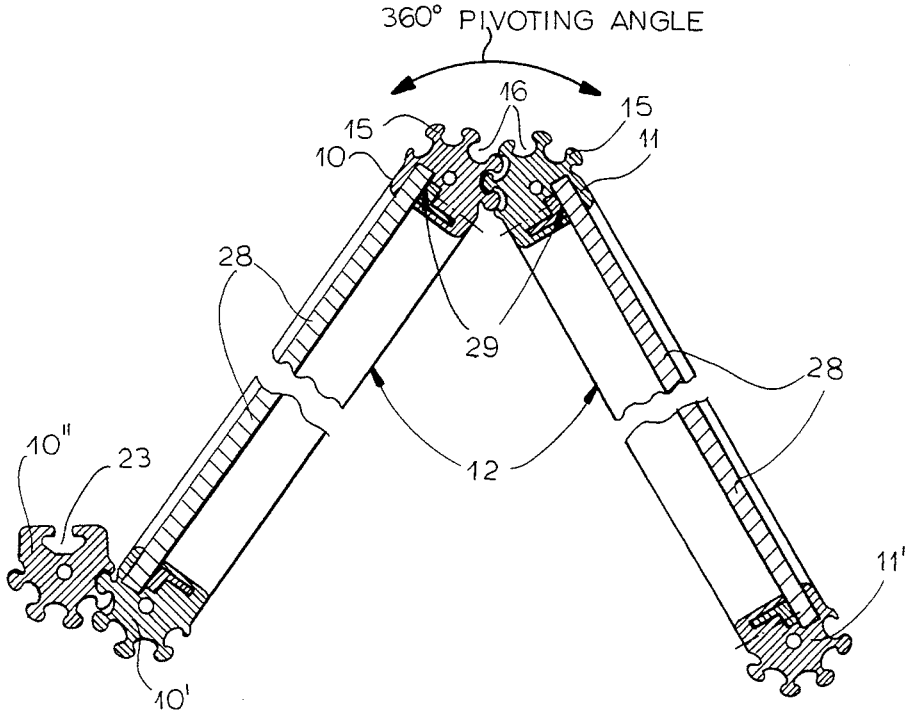
10 Claims, 7 Drawing Sheets