United States Patent [19]

Dierkes

[11] **4,168,871**

[45] **Sep. 25, 1979**

[54] **SHOE RACK**

[75] Inventor: **Erwin Dierkes,** Beverungen, Fed. Rep. of Germany

[73] Assignee: **Firma Erwin Dierkes Kleinmobelfabrik,** Beverungen, Fed. Rep. of Germany

[21] Appl. No.: **888,495**

[22] Filed: **Mar. 20, 1978**

[51] **Int. Cl.**[2] **A47B 88/00;** A47F 7/08

[52] **U.S. Cl.** **312/324;** 312/327; 312/313; 211/34

[58] **Field of Search** ..... 312/324, 327, 313, 271, 312/322; 211/34, 35, 36, 37, 38, 60 SK

[56] **References Cited**

U.S. PATENT DOCUMENTS

198,056	12/1877	Stein	312/313
964,242	7/1910	Greenawalt	312/271
1,702,361	2/1929	Olinger	312/313
1,920,452	8/1933	Wagner	312/313
2,294,504	9/1942	Knape	211/38
2,648,583	8/1953	Teach	312/313
2,698,689	1/1955	Novack	211/34
2,785,036	3/1957	Elsden-King et al.	312/327
3,625,371	12/1971	Dill	312/313
3,801,279	4/1974	Grieco	312/271

FOREIGN PATENT DOCUMENTS

1172017	6/1964	Fed. Rep. of Germany	211/37
653163	5/1951	United Kingdom	211/37
677288	8/1952	United Kingdom	211/37

OTHER PUBLICATIONS

Wash. Post, p. 17M 6-24-51.

Primary Examiner—Victor N. Sakran

Attorney, Agent, or Firm—Schwartz, Jeffery, Schwaab, Mack, Blumenthal & Koch

[57] **ABSTRACT**

A shoe rack or cabinet is provided with at least one flap door. A first shoe receiving compartment is journalled to pivot within the rack about a horizontal axis. A second shoe receiving compartment is secured to the inside of the flap door and is connected by control levers to pivot with the first shoe receiving compartment secured to the rack.
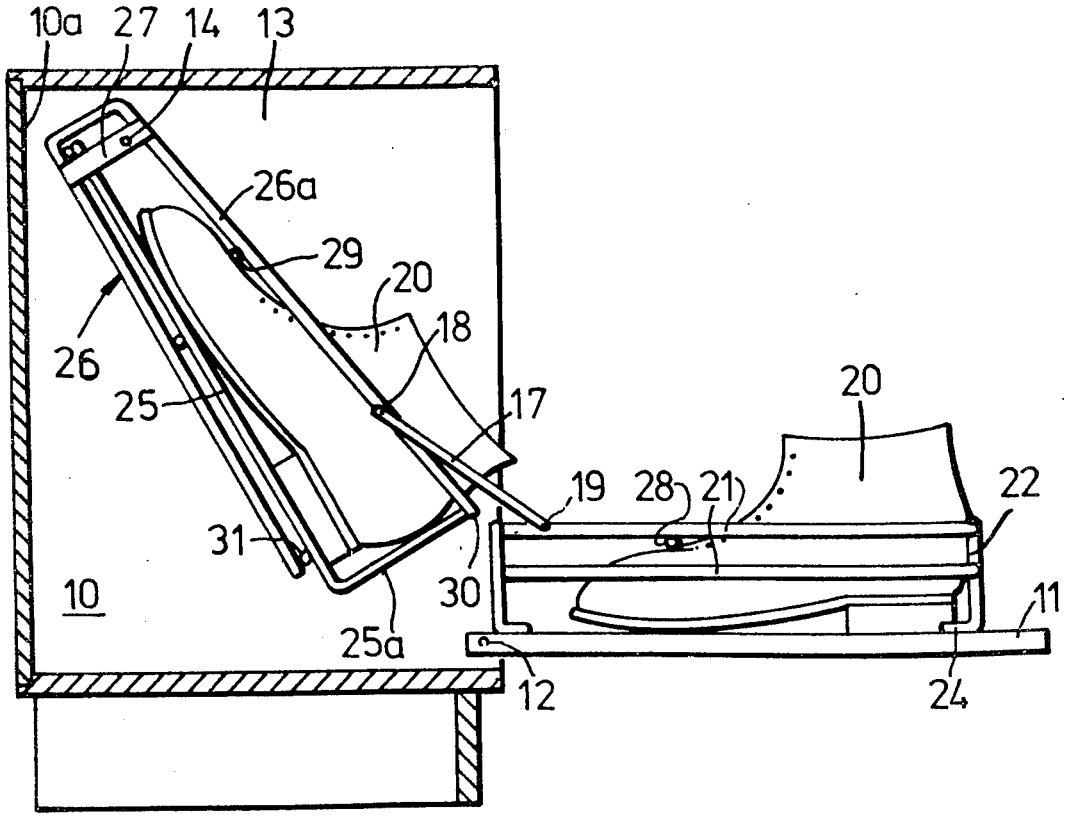
5 Claims, 3 Drawing Figures