US008360771B2

(12) **United States Patent**
Stookey et al.

(10) **Patent No.: US 8,360,771 B2**
(45) **Date of Patent: Jan. 29, 2013**

(54) **HANDPIECE FOR DETECTION OF DENTAL DEMINERALIZATION**

(75) Inventors: **George K. Stookey**, Carmel, IN (US); **Charles L. Thomeczek, Jr.**, Fishers, IN (US); **Jun Ge**, Indianapolis, IN (US)

(73) Assignee: **Therametric Technologies, Inc.**, Indianapolis, IN (US)

(*) Notice: Subject to any disclaimer, the term of this patent is extended or adjusted under 35 U.S.C. 154(b) by 1204 days.

(21) Appl. No.: **11/617,103**

(22) Filed: **Dec. 28, 2006**

(65) **Prior Publication Data**

US 2008/0160477 A1 Jul. 3, 2008

(51) **Int. Cl.**
A61C 1/00 (2006.01)
A61C 3/00 (2006.01)

(52) **U.S. Cl.** **433/29**

(58) **Field of Classification Search** 433/29–31; 600/179, 160, 109, 129, 175, 173, 189; 606/88–90
See application file for complete search history.

(56) **References Cited**

U.S. PATENT DOCUMENTS

3,561,433	A	2/1971	Kovach
4,279,594	A	7/1981	Rigutto
4,290,433	A	9/1981	Alfano
4,479,499	A	10/1984	Alfano
4,515,476	A	5/1985	Ingmar
4,976,951	A	12/1990	Rosenberg et al.
5,061,880	A	10/1991	Hashiguchi et al.
5,139,420	A	8/1992	Walker
5,280,278	A	1/1994	Vick
5,306,144	A	4/1994	Hibst et al.
5,382,163	A	1/1995	Putnam
5,449,290	A	9/1995	Reitz
5,454,022	A	9/1995	Lee et al.
5,503,559	A	4/1996	Vari
5,550,380	A	8/1996	Sugawara et al.
5,570,182	A	10/1996	Nathel et al.
5,742,700	A	4/1998	Yoon et al.
5,759,030	A	6/1998	Jung et al.
5,818,587	A	10/1998	Devaraj et al.
5,894,620	A	4/1999	Polaert et al.
5,951,284	A	9/1999	Lake
5,961,327	A	10/1999	Löhn
6,008,889	A	12/1999	Zeng et al.
6,024,562	A	2/2000	Hibst et al.

(Continued)

FOREIGN PATENT DOCUMENTS

DE	40 09 438	9/1991
EP	0 113 152 A2	7/1984
EP	0 326 497 A2	8/1989
EP	0 920 831 A1	6/1999
EP	1 269 909 A1	1/2003

(Continued)

OTHER PUBLICATIONS

Web pages (3), www.kavousa.com, DIAGNOdent, Kayo Diagno Dent, dated Mar. 10, 2001.

(Continued)

Primary Examiner — Todd Manahan
Assistant Examiner — Yogesh Patel
(74) *Attorney, Agent, or Firm* — Faegre Baker Daniels LLP

(57) **ABSTRACT**

A dental implement including a housing, a light source, and an air supply, the implement being suitable for examining tissue such as dentition of a patient and detecting loss of mineralization therein. The implement is capable of operating in a wireless mode. The implement is further able to communicate with a computing device to allow recording of images captured by the implement.
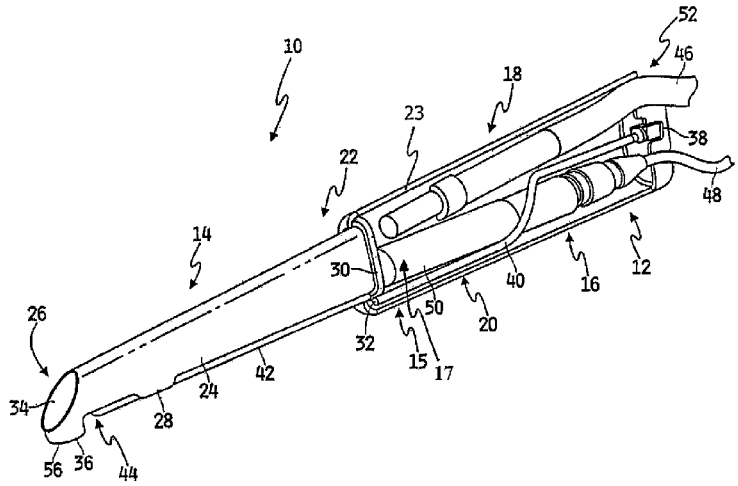
15 Claims, 9 Drawing Sheets