US005451371A

United States Patent [19]

Zanini-Fisher et al.

[11] Patent Number: 5,451,371

[45] Date of Patent: Sep. 19, 1995

[54] HIGH-SENSITIVITY, SILICON-BASED, MICROCALORIMETRIC GAS SENSOR

[75] Inventors: **Margherita Zanini-Fisher**, Bloomfield Township; **Jacobus H. Visser**, Southfield, both of Mich.

[73] Assignee: **Ford Motor Company**, Dearborn, Mich.

[21] Appl. No.: **257,606**

[22] Filed: **Jun. 9, 1994**

[51] **Int. Cl.**[6] **G01K 17/00**; G01N 25/20

[52] **U.S. Cl.** **422/51**; 422/95; 374/31; 374/37; 431/12; 431/89; 431/76; 60/602; 60/273; 204/153.1; 204/424

[58] **Field of Search** 422/95, 51; 374/31, 374/37; 73/25.03; 431/12, 89, 76; 60/602, 273, 285; 204/424, 153.1

[56] **References Cited**

U.S. PATENT DOCUMENTS

4,329,873	5/1982	Maeda	73/190
4,329,874	5/1982	Maeda	73/190
4,337,654	7/1982	Austin et al.	73/190
4,706,493	11/1987	Chang et al.	73/23
4,771,271	9/1988	Zanini-Fisher	340/620
4,914,742	4/1990	Higashi et al.	357/26
5,006,421	4/1991	Yang et al.	428/641
5,012,432	4/1991	Stetter et al.	364/557
5,204,262	4/1993	Meiering et al.	435/291
5,231,878	8/1993	Zanini-Fisher et al.	73/204.26
5,250,169	10/1993	Logothetis et al.	204/424
5,265,417	11/1993	Visser et al.	60/274
5,281,313	1/1994	Visser et al.	204/153.1
5,310,335	5/1994	van Bukum	431/12
5,331,845	7/1994	Bals et al.	73/61.43

OTHER PUBLICATIONS

"The Si Planar Pellistor: A Low-Power Pellistor Sensor In Si Thin-Film Technology", M. Gall, Sensors and Actuators B, 4 (1991), pp. 533-538.

"A Low Power Integrated Catalytic Gas Sensor", P. Krebs et al, Sensors and Actuators B, 12 (1993), pp. 1-4.

Primary Examiner—Robert J. Warden
Assistant Examiner—N. Bhat
Attorney, Agent, or Firm—Roger L. May; Peter Abolins

[57] **ABSTRACT**

A gas sensor for measuring gas constituents, particularly exhaust gas constituents for an internal combustion engine, comprising a pair of polysilicon plates, each plate supporting a pair of resistors, one serving as a heater and the other as a thermometer, one plate being coated with a catalyst to promote combustion of unburned combustible gas constituents, wherein provision is made for reducing temperature gradients across the plates and for effecting temperature uniformity of the catalyst while maintaining a high degree of structural integrity.
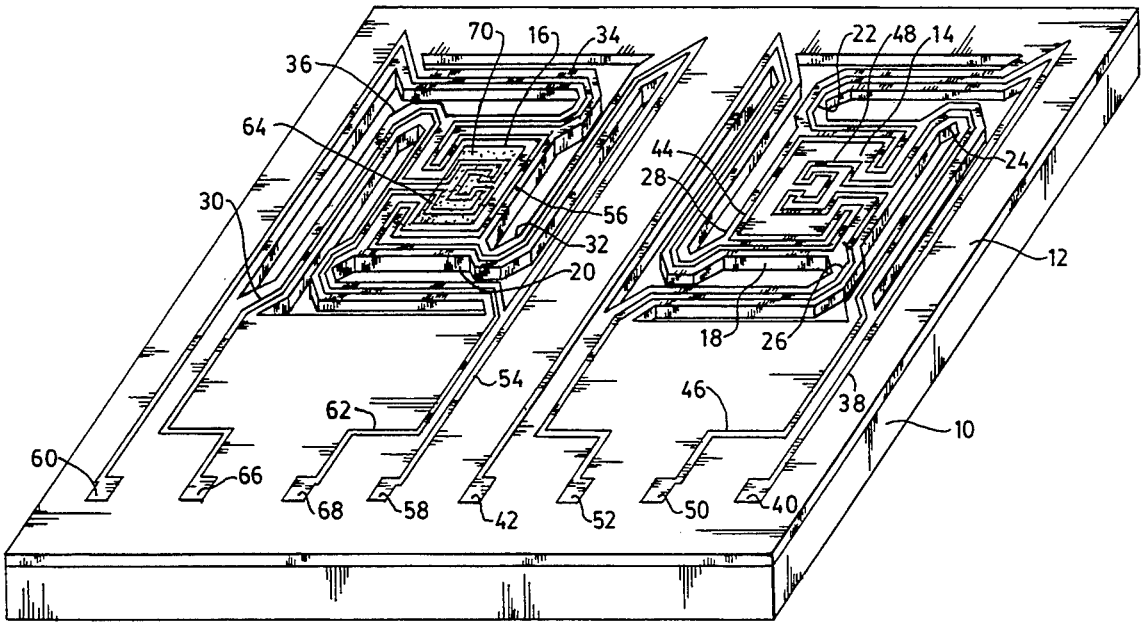
5 Claims, 3 Drawing Sheets