US005250071A

United States Patent [19]

Palermo

[11] **Patent Number: 5,250,071**

[45] **Date of Patent: Oct. 5, 1993**

[54] **DETACHABLE EMBOLIC COIL ASSEMBLY USING INTERLOCKING CLASPS AND METHOD OF USE**

[75] Inventor: **Thomas J. Palermo**, San Jose, Calif.

[73] Assignee: **Target Therapeutics, Inc.**, Fremont, Calif.

[21] Appl. No.: **949,094**

[22] Filed: **Sep. 22, 1992**

[51] **Int. Cl.**[5] **A61M 29/00**

[52] **U.S. Cl.** **606/198**; 128/898; 606/108

[58] **Field of Search** 623/1, 12; 606/194, 606/152, 153, 108; 128/898

[56] **References Cited**

U.S. PATENT DOCUMENTS

3,334,629 8/1967 Cohn .
4,739,768 4/1988 Engelson .
4,813,934 3/1989 Engelson et al. 604/99
4,884,579 12/1989 Engelson .
4,957,501 9/1990 Lahille et al. 606/200
4,994,069 2/1991 Richart et al. .
5,108,407 4/1992 Geremia et al. 606/108
5,109,867 5/1992 Twyford 604/283
5,122,136 6/1992 Guglielmi et al. 606/32

Primary Examiner—Jerome L. Kruter
Attorney, Agent, or Firm—Morrison & Foerster

[57] **ABSTRACT**

This invention is a surgical instrument and specifically is a device for delivering an embolic coil to a selected site within the vasculature of a human body via use of a catheter. In particular, the device uses embolic coils having interlocking clasps on the coils which are secured to each other by a control wire within the catheter. Retraction of the control wire into the catheter body uncouples the distal coil.
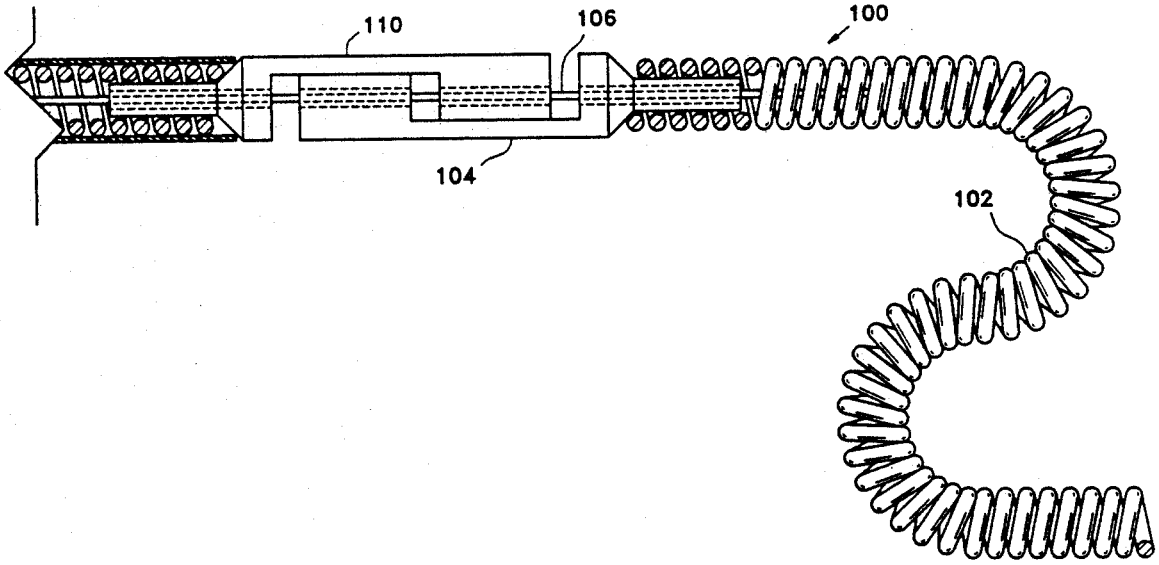
21 Claims, 5 Drawing Sheets