CONSTRUCTION TOY BLOCK

Filed Aug. 9, 1955 4 Sheets-Sheet 1

FIG. 2

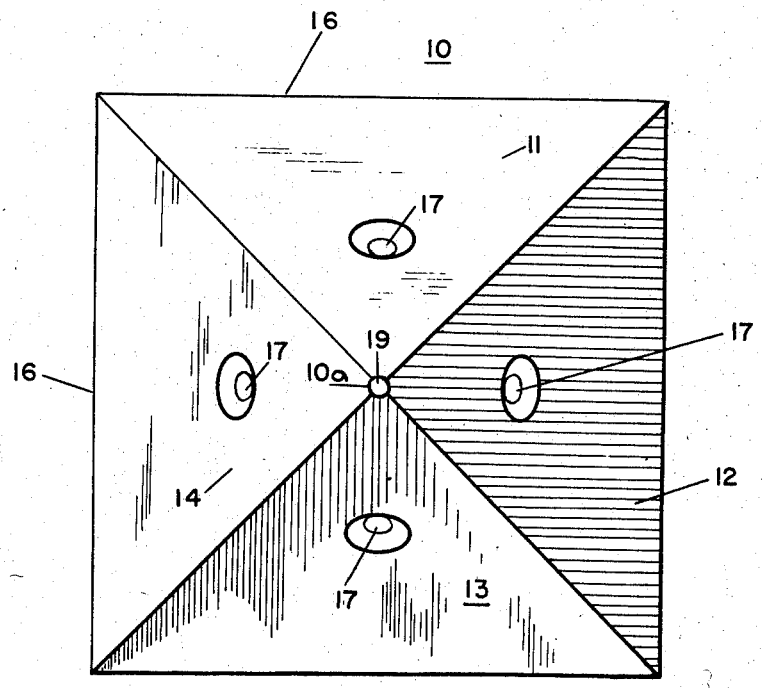

FIG. 1

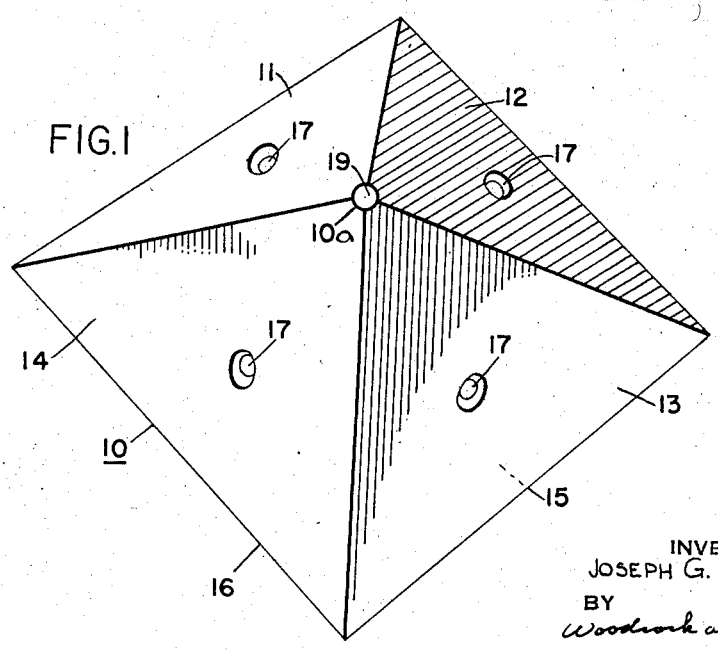

INVENTOR
JOSEPH G. GARDELLIN
BY
Woodcock and Phelan
ATTORNEYS