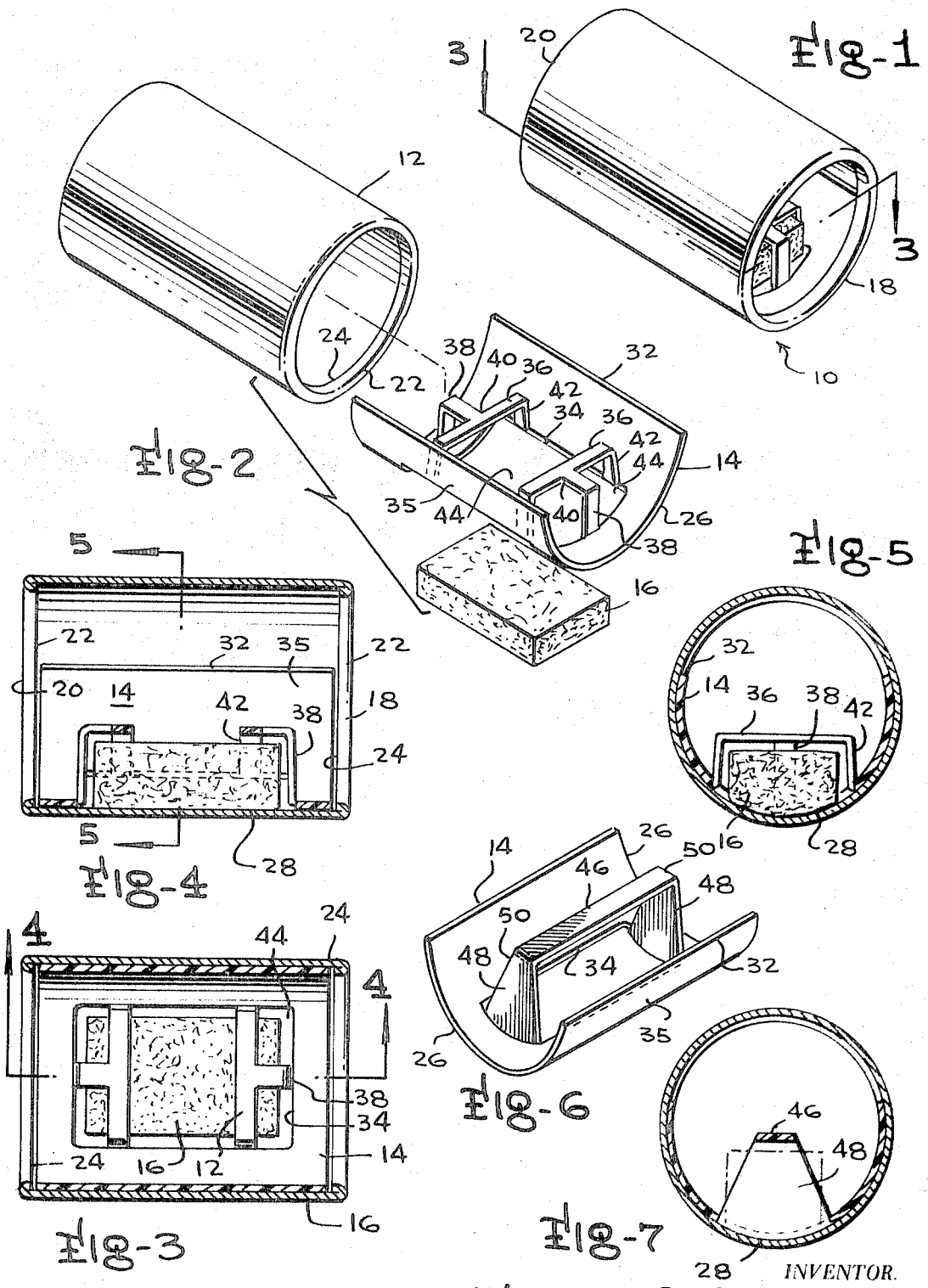

INVENTOR.
WALTER C. GORDON
BY
Mason, Fenwick & Lawrence
ATTORNEYS