US008841071B2

(12) **United States Patent**
Link

(10) **Patent No.: US 8,841,071 B2**
(45) **Date of Patent: Sep. 23, 2014**

(54) **SAMPLE MULTIPLEXING**

(75) Inventor: **Darren Link**, Lexington, MA (US)

(73) Assignee: **Raindance Technologies, Inc.**, Billerica, MA (US)

(*) Notice: Subject to any disclaimer, the term of this patent is extended or adjusted under 35 U.S.C. 154(b) by 0 days.

(21) Appl. No.: **13/485,234**

(22) Filed: **May 31, 2012**

(65) **Prior Publication Data**

US 2012/0309002 A1 Dec. 6, 2012

Related U.S. Application Data

(60) Provisional application No. 61/492,605, filed on Jun. 2, 2011.

(51) **Int. Cl.**

C12Q 1/68	(2006.01)
C12P 19/34	(2006.01)
C40B 30/10	(2006.01)
B01L 3/00	(2006.01)

(52) **U.S. Cl.**

CPC ***C12Q 1/686*** (2013.01); *C12Q 2537/143* (2013.01); *C12Q 2563/185* (2013.01)

USPC **435/6.1**; 435/91.2; 422/501; 506/12

(58) **Field of Classification Search**

None

See application file for complete search history.

(56) **References Cited**

U.S. PATENT DOCUMENTS

2,097,692	A	11/1937	Fiegel
2,164,172	A	6/1939	Dalton
2,656,508	A	10/1953	Coulter
2,692,800	A	10/1954	Nichols et al.
2,797,149	A	6/1957	Skeggs
2,879,141	A	3/1959	Skeggs
2,971,700	A	2/1961	Peeps
3,479,141	A	11/1969	Smythe et al.
3,608,821	A	9/1971	Simm et al.
3,698,635	A	10/1972	Sickles
3,816,331	A	6/1974	Brown, Jr. et al.
3,930,061	A	12/1975	Scharfenberger
3,960,187	A	6/1976	Stock et al.
3,980,541	A	9/1976	Aine
3,982,541	A	9/1976	L'Esperance, Jr.
4,014,469	A	3/1977	Sato
4,022,575	A	5/1977	Hansen et al.
4,034,966	A	7/1977	Suh et al.

(Continued)

FOREIGN PATENT DOCUMENTS

AU	2004225691	B2	6/2010
CA	2520548	A1	10/2004

(Continued)

OTHER PUBLICATIONS

Adang, A.E. et al., The contribution of combinatorial chemistry to lead generation: an interim analysis, Curr Med Chem 8: 985-998 (2001).

(Continued)

Primary Examiner — Betty Forman

(74) *Attorney, Agent, or Firm* — Brown Rudnick LLP; Thomas C. Meyers

(57) **ABSTRACT**

The invention generally relates to methods for sample multiplexing. In certain embodiments, methods of the invention obtaining a plurality of different reactant molecules, attaching a unique identifier to the reactant molecules, and forming a droplet including the reactant molecules.
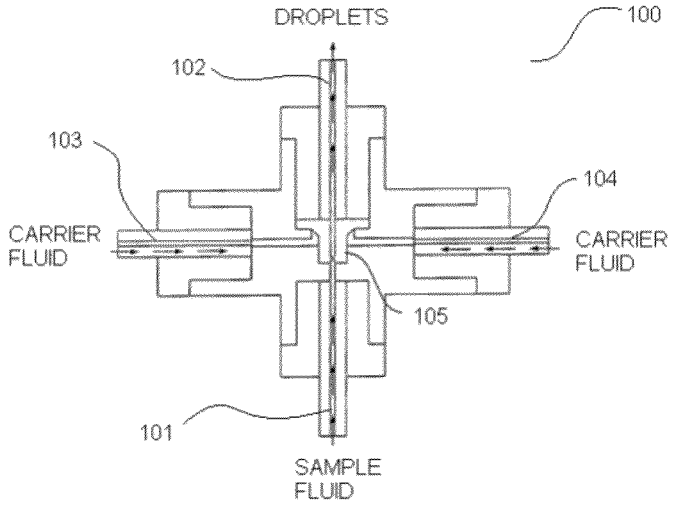
21 Claims, 4 Drawing Sheets