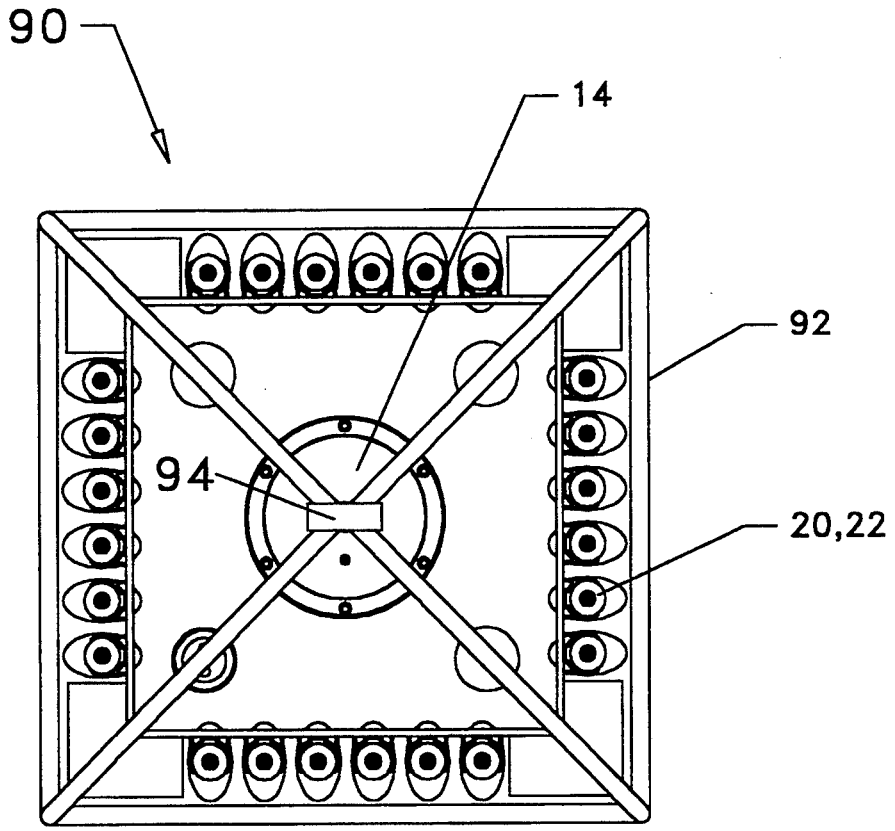FIG 9