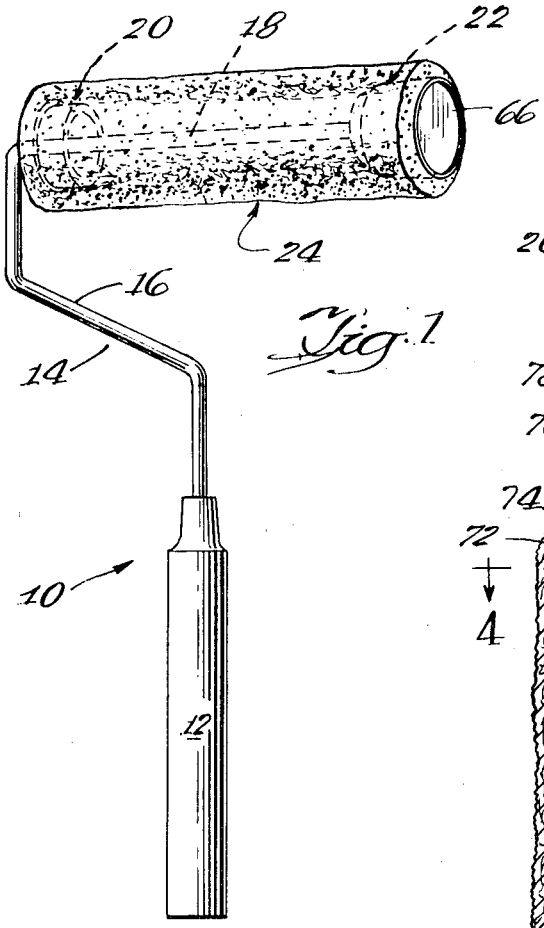

Fig. 1

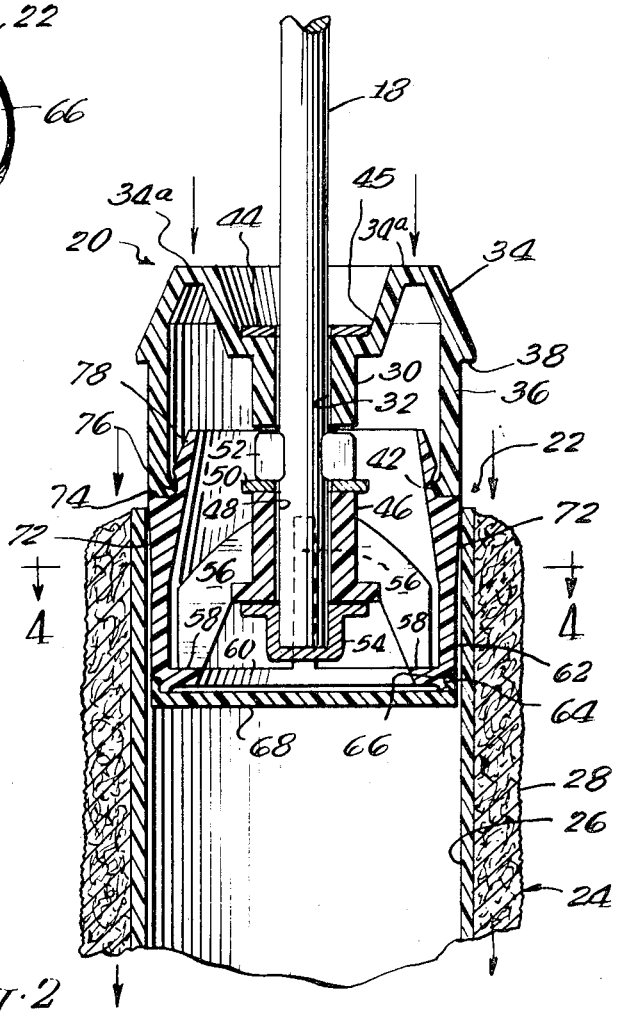

Fig. 2

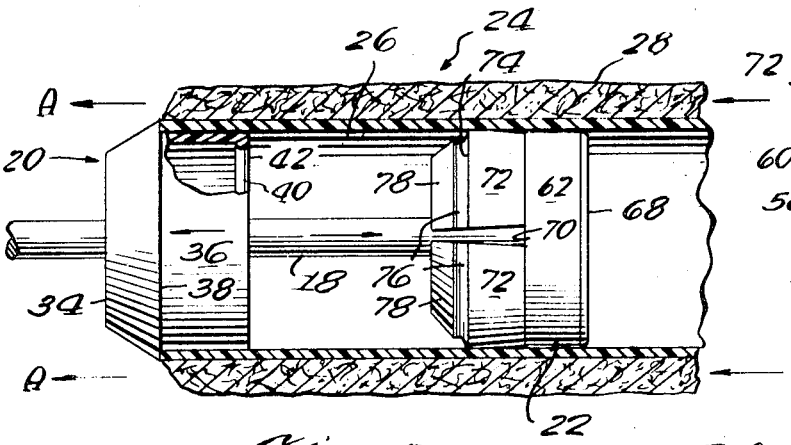

Fig. 3

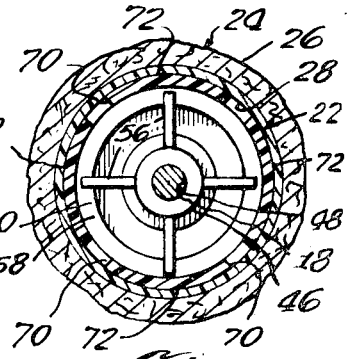

Fig. 4

INVENTORS
John A. Phannis
Giacinto C D'Ercoli
BY Hofgren, Wegner, Allen, Stellman & McCord
ATTORNEYS