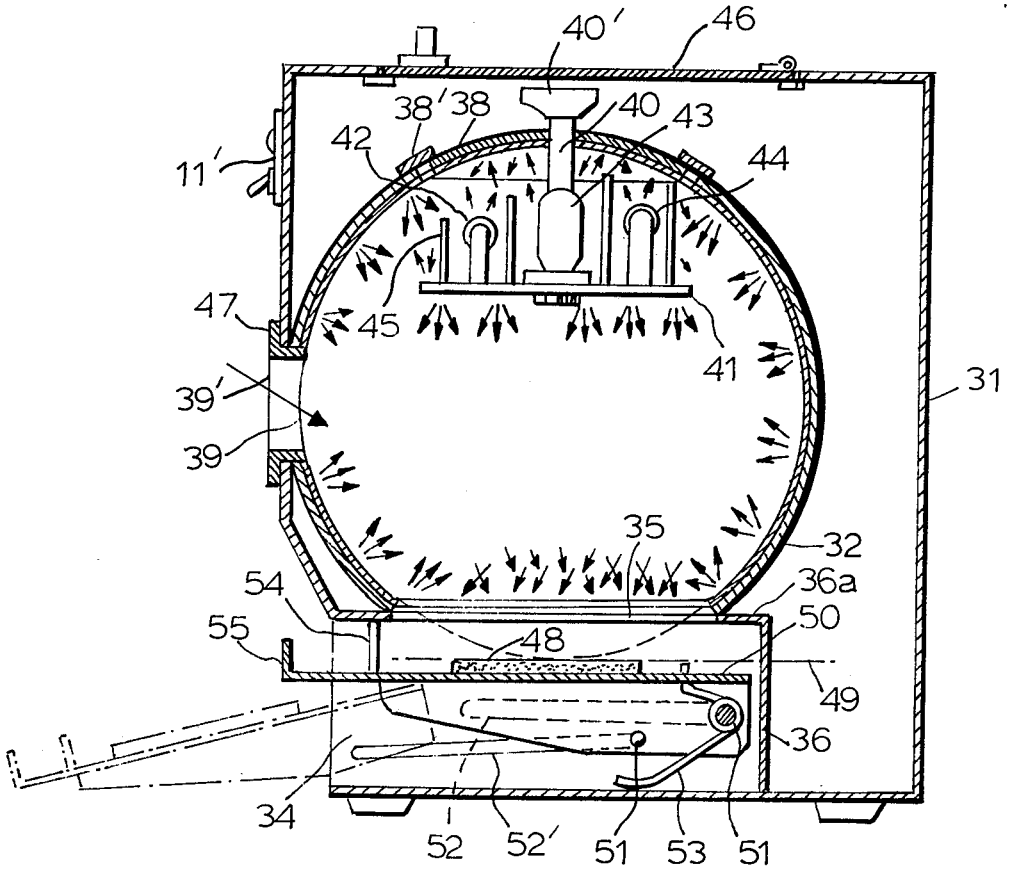
40'
46
38'
38
40
43
42
44
11'
47
45
41
31
39'
39
35
32
36a
54
50
55
48
49
36
34
52
52'
51
53
51

FIG. 5