Dec. 16, 1947. C. I. LONGENECKER 2,432,671

GROUTING ATTACHMENT FOR CONCRETE PUMPS

Filed July 12, 1945 2 Sheets-Sheet 1

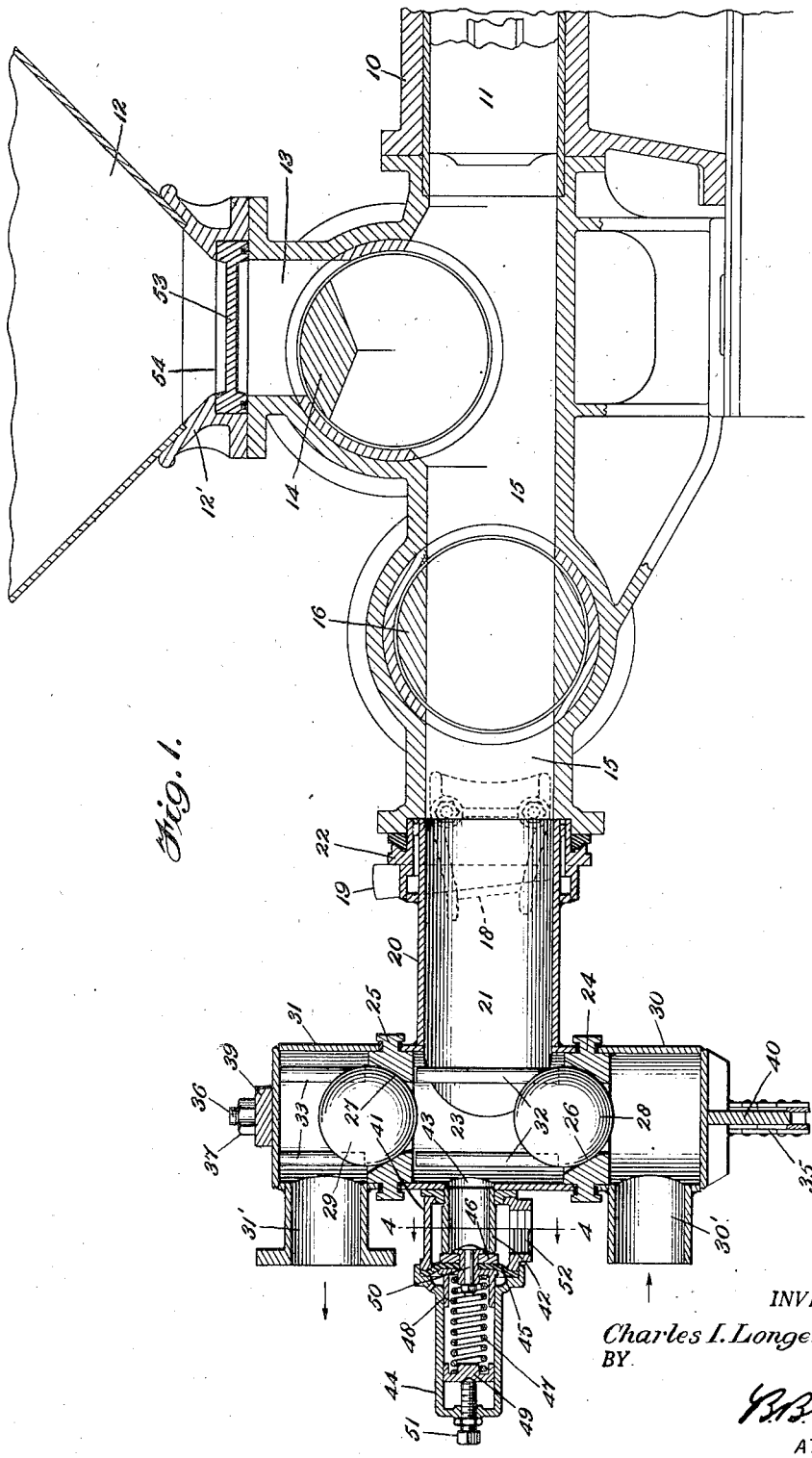

Fig. 1.

INVENTOR.
Charles I. Longenecker,
BY
B. B. Collings
ATTORNEY