JET SHOES

Filed Feb. 24, 1967

FIG. 4a

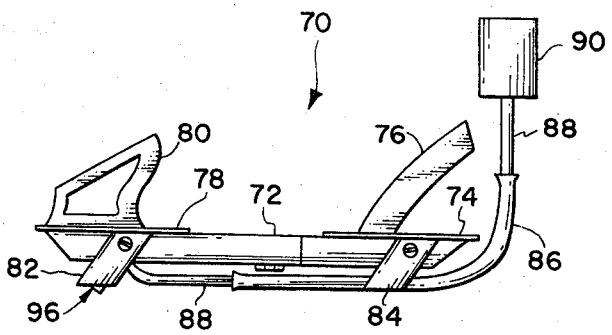

FIG. 4b

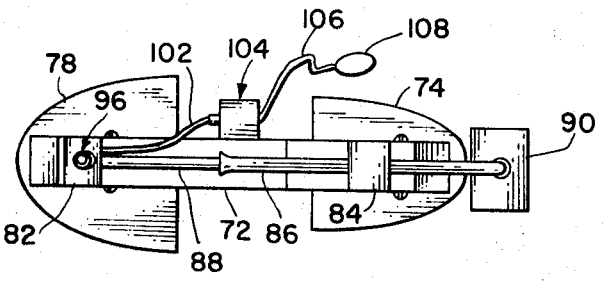

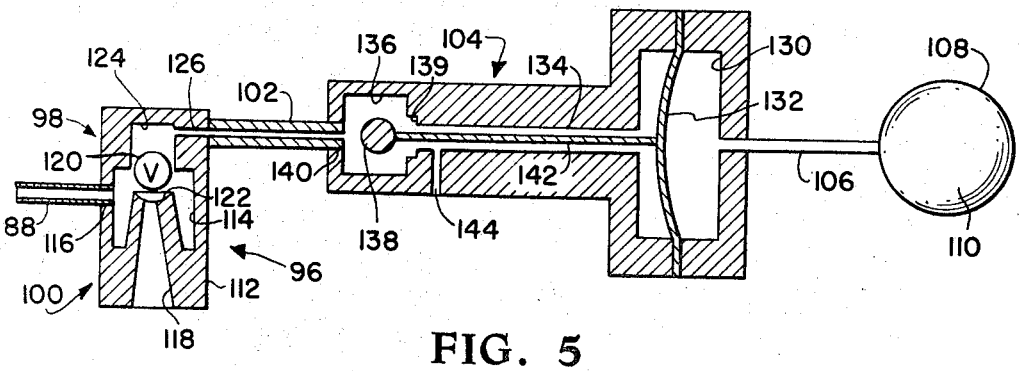

FIG. 5

INVENTORS
JOHN D. BIRD
HOWELL D. GARNER
ERNEST D. LOUNSBERRY
DAVID F. THOMAS, JR.
BY
John S. Coy
Gordon McBride
ATTORNEYS