JET SHOES

Filed Feb. 24, 1967

FIG. 1a

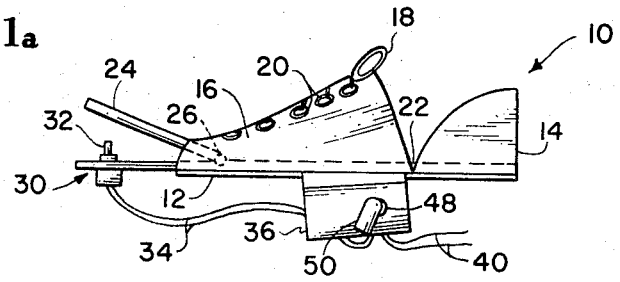

FIG. 1b

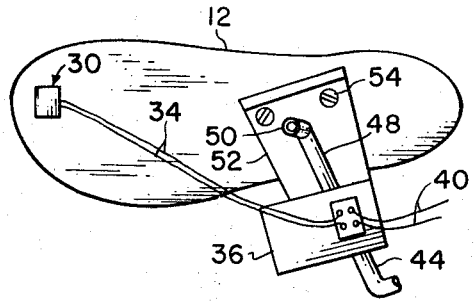

FIG. 2

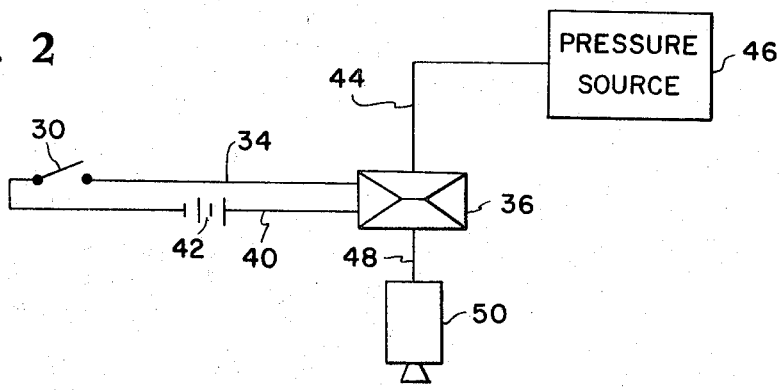

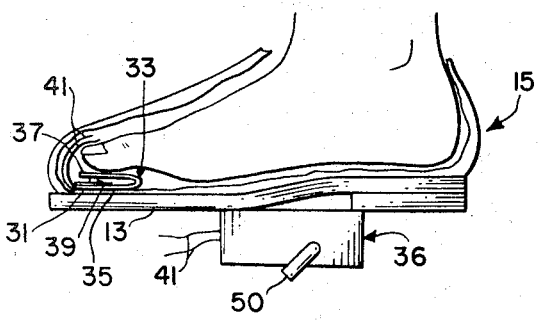

FIG. 3

INVENTORS
JOHN D. BIRD
HOWELL D. GARNER
ERNEST D. LOUNSBERRY
DAVID F. THOMAS, JR.
BY
Gordon McBride
ATTORNEYS