US009410471B2

(12) **United States Patent**
Bäumchen

(10) **Patent No.: US 9,410,471 B2**
(45) **Date of Patent: Aug. 9, 2016**

(54) **EXHAUST SYSTEM COMPONENT**

(71) Applicant: **Eberspächer Exhaust Technology GmbH & Co. KG**, Neunkirchen (DE)

(72) Inventor: **Carsten Bäumchen**, Oberthal (DE)

(73) Assignee: **Eberspächer Exhuast Technology GmbH & Co. KG**, Neunkirchen (DE)

(*) Notice: Subject to any disclaimer, the term of this patent is extended or adjusted under 35 U.S.C. 154(b) by 120 days.

(21) Appl. No.: **14/268,328**

(22) Filed: **May 2, 2014**

(65) **Prior Publication Data**

US 2014/0325969 A1 Nov. 6, 2014

(30) **Foreign Application Priority Data**

May 3, 2013 (DE) 10 2013 208 184

(51) **Int. Cl.**

F01N 3/00	(2006.01)
F01N 13/18	(2010.01)
F01N 3/24	(2006.01)
F01N 3/28	(2006.01)
F01N 13/08	(2010.01)
F01N 3/021	(2006.01)

(52) **U.S. Cl.**

CPC ***F01N 13/1844*** (2013.01); ***F01N 3/0211*** (2013.01); ***F01N 3/24*** (2013.01); ***F01N 3/2839*** (2013.01); ***F01N 13/08*** (2013.01); ***F01N 13/18*** (2013.01); ***F01N 13/1827*** (2013.01); ***F01N 13/1838*** (2013.01); *F01N 2450/22* (2013.01); *F01N 2470/24* (2013.01); *Y02T 10/20* (2013.01)

(58) **Field of Classification Search**

None

See application file for complete search history.

(56) **References Cited**

U.S. PATENT DOCUMENTS

1,736,319	A	11/1929	Maxim	
4,109,753	A *	8/1978	Lyman	F01N 1/10 181/252
4,570,747	A	2/1986	Ortyl	
5,186,502	A *	2/1993	Martin	F16L 39/005 138/112
5,606,857	A *	3/1997	Harada	F01N 13/08 60/322
7,784,273	B2 *	8/2010	Kanaya	B01D 53/9431 60/286
8,607,555	B2 *	12/2013	Kaiser	B01F 3/04049 60/286
9,095,827	B2 *	8/2015	Sampath	B01F 5/0473

(Continued)

FOREIGN PATENT DOCUMENTS

DE	199 62 311 A1	7/2001
DE	100 21 809 C1	11/2001

(Continued)

Primary Examiner — Jesse Bogue

(74) *Attorney, Agent, or Firm* — McGlew and Tuttle, P.C.

(57) **ABSTRACT**

An exhaust system component (**1**), for an exhaust system of an internal combustion engine, includes a metallic first part (**3**), which is inserted into a metallic second part (**2**), such that an inner jacket section (**7**) of the first part (**3**) is arranged coaxially in an outer jacket section (**5**) of the second part (**2**), as well as at least one weld joint (**10**), which permanently connects the outer jacket section (**5**) to the inner jacket section (**7**). To simplify the assembly of the parts (**2**, **3**) with one another, a plurality of centering contours (**11**, **12**) are formed integrally on the outer jacket section (**5**), projecting inwardly, and/or are formed integrally on the outer jacket section (**7**), projecting outwardly, and are located at spaced locations from one another in the circumferential direction (**6**). The centering contours center the inner jacket section (**7**) in the outer jacket section (**5**).
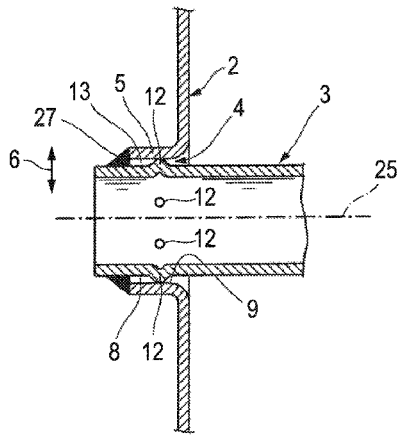
17 Claims, 3 Drawing Sheets