US009409371B1

(12) **United States Patent**
Valenti, Jr. et al.

(10) **Patent No.: US 9,409,371 B1**
(45) **Date of Patent: Aug. 9, 2016**

(54) **LABEL FOLDING APPARATUS AND METHODS FOR ITS USE**

(71) Applicant: **Chicago Tag & Label, Inc.**, Libertyville, IL (US)

(72) Inventors: **F. Paul Valenti, Jr.**, Barrington, IL (US); **Carl Opel**, Carol Stream, IL (US); **Daniel Hedger**, Grayslake, IL (US); **John Cammarata**, Frankfort, IL (US); **Mike English**, Frankfort, IL (US)

(73) Assignee: **Chicago Tag & Label, Inc.**, Libertyville, IL (US)

(*) Notice: Subject to any disclaimer, the term of this patent is extended or adjusted under 35 U.S.C. 154(b) by 0 days.

(21) Appl. No.: **15/063,700**

(22) Filed: **Mar. 8, 2016**

Related U.S. Application Data

(63) Continuation-in-part of application No. 14/212,277, filed on Mar. 14, 2014, now Pat. No. 9,302,444.

(51) **Int. Cl.**
B31D 1/02 (2006.01)

(52) **U.S. Cl.**
CPC ***B31D 1/022*** (2013.01)

(58) **Field of Classification Search**
CPC B31B 1/12; B31B 1/26; B31B 1/52; B31D 1/02; B31D 1/22
USPC 493/405, 413, 414, 419, 454, 460
See application file for complete search history.

(56) **References Cited**

U.S. PATENT DOCUMENTS

3,724,341	A	4/1973	Hook
4,091,595	A	5/1978	Pelster et al.
4,102,729	A	7/1978	Annas, Sr.
4,233,798	A	11/1980	Helding
4,270,909	A	6/1981	Ireland
4,272,235	A	6/1981	Barnett
4,290,764	A	9/1981	Middel
4,300,896	A	11/1981	Priebs
4,304,621	A	12/1981	Appoldt et al.
4,347,091	A	8/1982	Hauck et al.
4,367,117	A	1/1983	Seaborn
4,402,679	A	9/1983	Heina
4,432,745	A	2/1984	Eldridge
4,465,453	A	8/1984	Turner et al.
4,470,795	A	9/1984	Prusak
4,475,966	A	10/1984	Turner et al.
4,530,729	A	7/1985	Fuchs et al.
4,617,081	A	10/1986	Bleau et al.
4,627,829	A	12/1986	Brady, Jr. et al.
4,636,192	A	1/1987	Vogtlander et al.
4,678,456	A	7/1987	Nigrelli, Sr.
5,024,644	A	6/1991	Bunch, III
5,826,408	A	10/1998	Ford
6,635,005	B1	10/2003	Duhamel et al.
7,083,559	B2	8/2006	Castello et al.

(Continued)

FOREIGN PATENT DOCUMENTS

GB	912594	* 12/1962	.....	B31D 1/022
WO	WO 2011112215	* 9/1984	.....	B32B 38/14

(Continued)

Primary Examiner — Gloria R Weeks

(74) *Attorney, Agent, or Firm* — Ice Miller LLP

(57) **ABSTRACT**

A label folding apparatus and methods for its use are disclosed. Such a label folding apparatus comprises a label folding assembly and a label holding assembly, and may be used to fold a foldable label placed onto the label holding assembly.
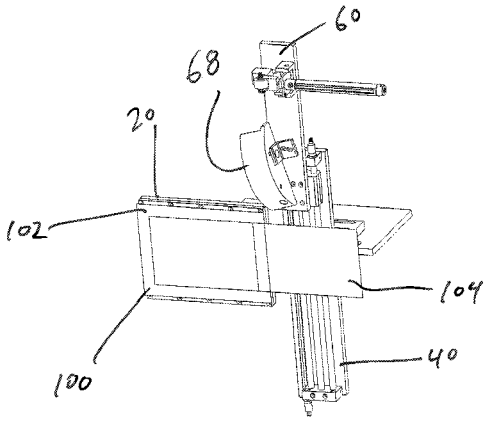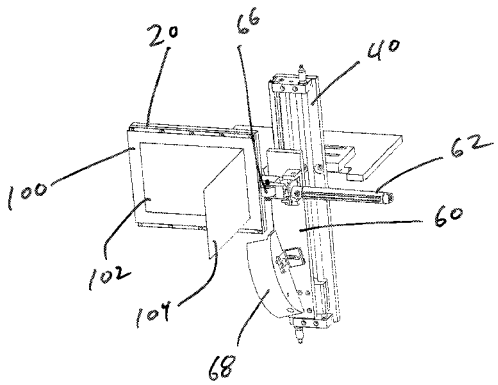
24 Claims, 31 Drawing Sheets