US009408971B2

(12) **United States Patent**
Carlyon

(10) **Patent No.: US 9,408,971 B2**
(45) **Date of Patent: Aug. 9, 2016**

(54) **SELF-CAPPING SYRINGE ASSEMBLY WITH ONE-WAY VALVE**

(75) Inventor: **James L. Carlyon**, Farmington, MO (US)

(73) Assignee: **Covidien LP**, Mansfield, MA (US)

(*) Notice: Subject to any disclaimer, the term of this patent is extended or adjusted under 35 U.S.C. 154(b) by 893 days.

(21) Appl. No.: **12/412,652**

(22) Filed: **Mar. 27, 2009**

(65) **Prior Publication Data**

US 2009/0247961 A1 Oct. 1, 2009

Related U.S. Application Data

(60) Provisional application No. 61/040,929, filed on Mar. 31, 2008.

(51) **Int. Cl.**
A61M 5/28 (2006.01)
A61M 5/31 (2006.01)

(52) **U.S. Cl.**
CPC ***A61M 5/28*** (2013.01); *A61M 5/3134* (2013.01); *A61M 2005/3128* (2013.01)

(58) **Field of Classification Search**
CPC A61M 2005/3128; A61M 5/28; A61M 5/3134
USPC 604/533, 218, 256, 192, 247
See application file for complete search history.

(56) **References Cited**

U.S. PATENT DOCUMENTS

3,570,484 A * 3/1971 Steer et al. 604/249
4,722,725 A * 2/1988 Sawyer et al. 604/27
5,135,512 A 8/1992 Mazurik et al.
5,453,097 A * 9/1995 Paradis 604/247
5,735,825 A * 4/1998 Stevens et al. 604/218
5,807,345 A * 9/1998 Grabenkort 604/199
5,899,887 A * 5/1999 Liu 604/195
2003/0199812 A1* 10/2003 Rosenberg 604/47
2006/0111667 A1* 5/2006 Matsuura A61M 5/3145 604/93.01
2006/0189932 A1* 8/2006 Yang et al. 604/110
2009/0030401 A1* 1/2009 Phillips 604/533
2009/0099552 A1* 4/2009 Levy et al. 604/533

FOREIGN PATENT DOCUMENTS

EP 0 325 049 7/1989
WO WO 03/051434 6/2003
WO WO 2006/136769 12/2006

OTHER PUBLICATIONS

European Patent Search Report dated Oct. 18, 2011 for European Patent Appln. No. EP 11 00 7214.

* cited by examiner

Primary Examiner — Aarti B Berdichevsky
Assistant Examiner — Brandy S Lee

(57) **ABSTRACT**

A syringe assembly is disclosed which includes a syringe body defining a fluid reservoir, a plunger assembly including a plunger rod and a sealing member supported on the plunger rod, and a luer cap releasably secured to a distal end of the syringe body. The luer cap includes a luer-type connector member and a fluid outlet. A one way valve is supported within the fluid outlet of the luer cap to prevent flow from the fluid outlet back into the fluid reservoir of the syringe body.
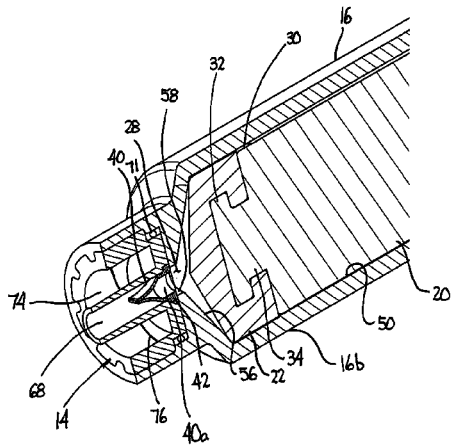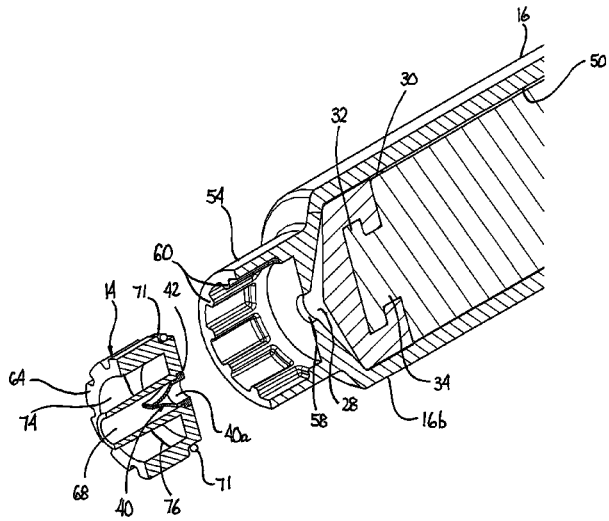
10 Claims, 4 Drawing Sheets