US009408671B2

(12) **United States Patent**
Buchalter et al.

(10) **Patent No.: US 9,408,671 B2**
(45) **Date of Patent: Aug. 9, 2016**

(54) **BIOPSY GRID**

(75) Inventors: **Neal Buchalter**, Short Hills, NJ (US); **Kenneth M. Zinn**, Westport, CT (US)

(73) Assignee: **PARKER LABORATORIES, INC.**, Fairfield, NJ (US)

(*) Notice: Subject to any disclaimer, the term of this patent is extended or adjusted under 35 U.S.C. 154(b) by 0 days.

(21) Appl. No.: **13/314,972**

(22) Filed: **Dec. 8, 2011**

(65) **Prior Publication Data**

US 2013/0150703 A1 Jun. 13, 2013

(51) **Int. Cl.**

G01B 3/14	(2006.01)
H05G 1/28	(2006.01)
A61B 19/00	(2006.01)
A61M 5/42	(2006.01)
A61B 6/04	(2006.01)
A61B 6/00	(2006.01)
A61B 17/00	(2006.01)
A61B 10/02	(2006.01)

(52) **U.S. Cl.**

CPC ***A61B 19/54*** (2013.01); ***A61B 6/0492*** (2013.01); ***A61B 6/481*** (2013.01); ***A61M 5/427*** (2013.01); *A61B 10/0233* (2013.01); *A61B 2017/00951* (2013.01); *A61B 2019/5454* (2013.01); *A61B 2019/5466* (2013.01)

(58) **Field of Classification Search**

CPC A61B 19/54; A61B 2019/5454; A61B 2019/5466; A61B 6/481; A61B 6/0492; A61B 10/0233; A61B 2017/00951; A61M 5/427

See application file for complete search history.

(56) **References Cited**

U.S. PATENT DOCUMENTS

3,547,121	A	12/1970	Cherry
4,774,957	A	10/1988	Nambu et al.
4,860,331	A	8/1989	Williams et al.
4,916,170	A	4/1990	Nambu et al.
4,985,019	A	1/1991	Michelson
5,052,035	A	9/1991	Krupnick
5,285,785	A	2/1994	Meyer
5,368,030	A	11/1994	Zinreich et al.
5,383,234	A	1/1995	Russell
5,407,440	A	4/1995	Zinreich et al.
5,427,099	A	6/1995	Adams

(Continued)

FOREIGN PATENT DOCUMENTS

JP	05068678	9/1993
JP	08238248	9/1996

(Continued)

OTHER PUBLICATIONS

International Search Report and Written Opinion of PCT Application No. PCT/US2012/068141, mailed Apr. 9, 2013, 12 pages.

(Continued)

Primary Examiner — Elmer Chao

(74) *Attorney, Agent, or Firm* — Kilpatrick Townsend & Stockton LLP

(57) **ABSTRACT**

A biopsy grid is provided that is useful in medical imaging. The biopsy grid comprises a hydrogel layer containing a mixture of contrast agents that are visible in images from X-ray, CT scans, MRI, and/or positron emission tomographs. The hydrogel mixture is attached to a frame having a silicone coated release liner and an adhesive layer. The hydrogel layer is cut into strips that serve as markers in an image. The biopsy grid can be used to locate the position of the marker relative to a tissue of interest in a medical image.
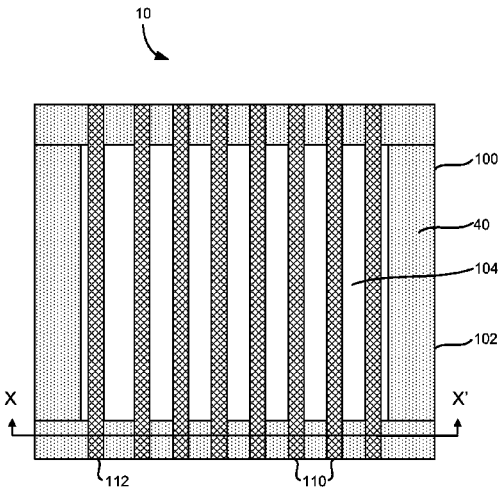
15 Claims, 3 Drawing Sheets