US009993270B2

(12) **United States Patent**
Butler

(10) **Patent No.: US 9,993,270 B2**
(45) **Date of Patent: Jun. 12, 2018**

(54) **BONE FASTENER AND METHODS OF USE**

(71) Applicant: **Warsaw Orthopedic, INc.**, Warsaw, IN (US)

(72) Inventor: **Brian Butler**, Atoka, TN (US)

(73) Assignee: **Warsaw Orthopedic, Inc.**, Warsaw, IN (US)

(*) Notice: Subject to any disclaimer, the term of this patent is extended or adjusted under 35 U.S.C. 154(b) by 0 days. days.

(21) Appl. No.: **14/334,970**

(22) Filed: **Jul. 18, 2014**

(65) **Prior Publication Data**

US 2016/0015429 A1 Jan. 21, 2016

(51) **Int. Cl.**
A61B 17/70 (2006.01)

(52) **U.S. Cl.**
CPC ***A61B 17/7035*** (2013.01)

(58) **Field of Classification Search**
CPC A61B 17/7032; A61B 17/7005; A61B 17/7037; A61B 17/7076; A61B 17/7082; A61B 17/7034; A61B 17/7086; A61B 17/7091; A61B 17/8605; A61B 17/7038; A61B 17/7067; A61B 17/7035
USPC 606/246–279, 300–328
See application file for complete search history.

(56) **References Cited**

U.S. PATENT DOCUMENTS

6,063,090 A * 5/2000 Schlapfer A61B 17/7041 606/270
7,722,652 B2 * 5/2010 Justis A61B 17/7035 606/267
8,308,782 B2 * 11/2012 Jackson A61B 17/7008 606/305
8,444,681 B2 * 5/2013 Jackson A61B 17/7032 606/300
9,084,634 B1 * 7/2015 Lab A61B 17/7038
9,168,069 B2 * 10/2015 Jackson A61B 17/7037
2007/0093826 A1 * 4/2007 Hawkes A61B 17/7032 606/279
2008/0015579 A1 * 1/2008 Whipple A61B 17/7037 606/250
2010/0152787 A1 * 6/2010 Walsh A61B 17/7037 606/308
2012/0209336 A1 * 8/2012 Jackson A61B 17/7032 606/305
2013/0110180 A1 * 5/2013 Doubler A61B 17/7037 606/308
2013/0144346 A1 * 6/2013 Jackson A61B 17/8605 606/305
2015/0119940 A1 * 4/2015 Jackson A61B 17/7076 606/266
2015/0173816 A1 * 6/2015 Biedermann A61B 17/8605 606/308

* cited by examiner

Primary Examiner — Pedro Philogene

(57) **ABSTRACT**

A bone fastener includes a first portion that defines a longitudinal axis and includes an inner surface defining an implant cavity. A second portion that includes a first end and a second end configured to penetrate tissue. A retainer includes a wall having a first end surface and a second end surface. The wall including at least one first elongated cavity and at least one second elongated cavity. The first cavity includes a gap of the first end surface and the second cavity including a gap of the second end surface. The wall further includes an inner surface disposed about the first end. Systems and methods are disclosed.
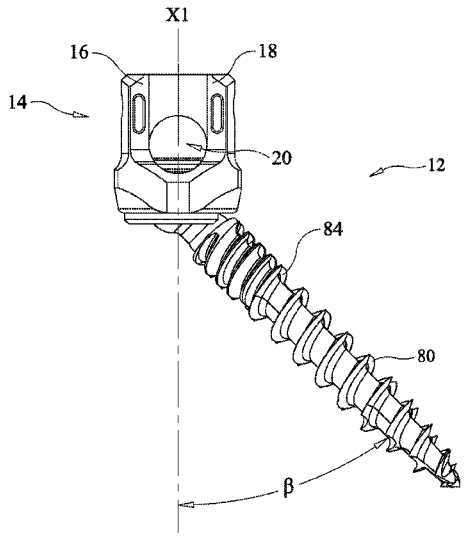
17 Claims, 7 Drawing Sheets