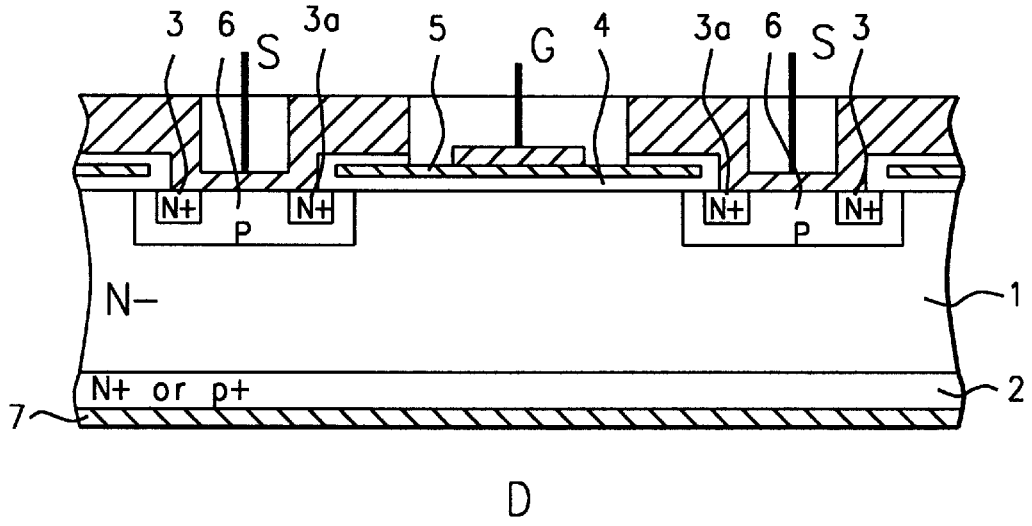

FIG. 1 – Prior Art

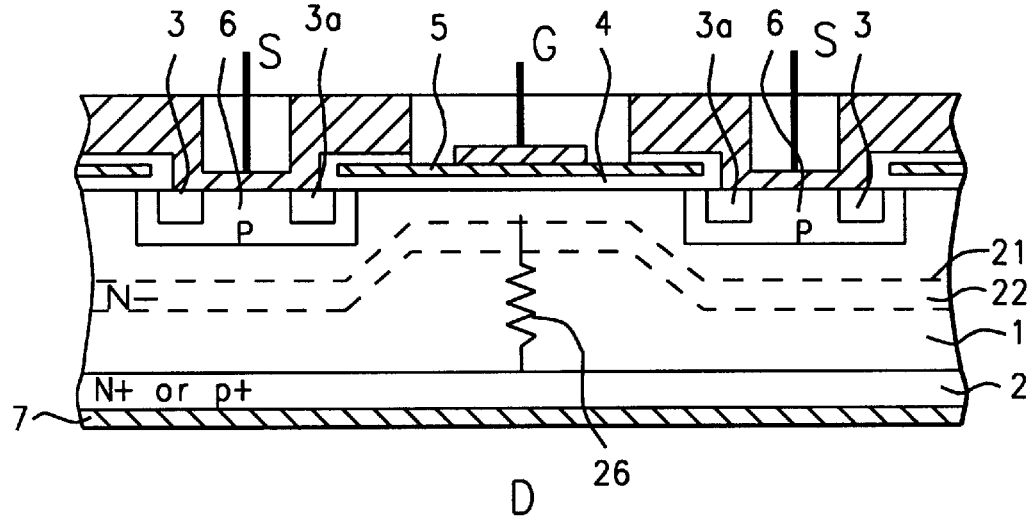

FIG. 2 – Prior Art