US008576370B1

(12) **United States Patent**
Sampica et al.

(10) **Patent No.: US 8,576,370 B1**
(45) **Date of Patent: Nov. 5, 2013**

(54) **SYSTEMS AND METHODS FOR NONPLANAR LAMINATED ASSEMBLIES**

(75) Inventors: **James D. Sampica**, Springville, IA (US); **Gary N. Prior**, Center Point, IA (US); **Paul R. Nemeth**, Springville, IA (US); **Brian K. Smith**, Marion, IA (US); **Kyle P. Dotson**, Cedar Rapids, IA (US)

(73) Assignee: **Rockwell Collins, Inc.**, Cedar Rapids, IA (US)

(*) Notice: Subject to any disclaimer, the term of this patent is extended or adjusted under 35 U.S.C. 154(b) by 655 days.

(21) Appl. No.: **12/827,989**

(22) Filed: **Jun. 30, 2010**

(51) **Int. Cl.**
G02F 1/1339 (2006.01)

(52) **U.S. Cl.**
USPC **349/155**

(58) **Field of Classification Search**
USPC 349/155
See application file for complete search history.

(56) **References Cited**

U.S. PATENT DOCUMENTS

3,616,197	A		10/1971	Amberg et al.
3,851,758	A		12/1974	Makhijani et al.
4,025,688	A	*	5/1977	Nagy et al. 428/350
4,188,254	A		2/1980	Hemperly, Jr.
4,747,577	A		5/1988	Dimock
5,108,532	A		4/1992	Thein et al.
5,566,840	A		10/1996	Waldner et al.
5,592,288	A		1/1997	Sampica et al.
5,678,303	A		10/1997	Wichmann
5,918,517	A		7/1999	Malapert et al.
5,950,512	A		9/1999	Fields
6,128,066	A		10/2000	Yokozeki
6,388,724	B1		5/2002	Campbell et al.
6,481,482	B1		11/2002	Shimotomai
6,614,057	B2		9/2003	Silvernail et al.
6,681,668	B1		1/2004	Smirle
6,803,245	B2		10/2004	Auch et al.
6,832,538	B1		12/2004	Hwang
6,984,545	B2		1/2006	Grigg et al.
6,998,648	B2		2/2006	Silvernail
7,273,403	B2		9/2007	Yokota et al.
7,381,110	B1		6/2008	Sampica et al.
7,435,311	B1		10/2008	Marzen et al.
7,452,258	B1		11/2008	Marzen et al.
7,566,254	B2		7/2009	Sampica et al.
7,814,676	B2		10/2010	Sampica et al.
2002/0186343	A1		12/2002	Liao et al.
2003/0089214	A1		5/2003	Fukuta et al.

(Continued)

FOREIGN PATENT DOCUMENTS

EP	0711103	B1	5/1996
JP	01 210328	A	8/1989

(Continued)

OTHER PUBLICATIONS

U.S. Appl. No. 12/009,472, filed Jan. 18, 2008, Sampica et al.

(Continued)

Primary Examiner — Lucy Chien
(74) *Attorney, Agent, or Firm* — Donna P. Suchy; Daniel M. Barbieri

(57) **ABSTRACT**

A display assembly includes a display having a substantially planar surface configured to provide an image, a substrate having a nonplanar surface, and a shim provided between the display and the substrate. The shim has a first nonplanar surface and a second generally planar surface. The first nonplanar surface has a shape generally corresponding to the shape of the nonplanar surface of the substrate.
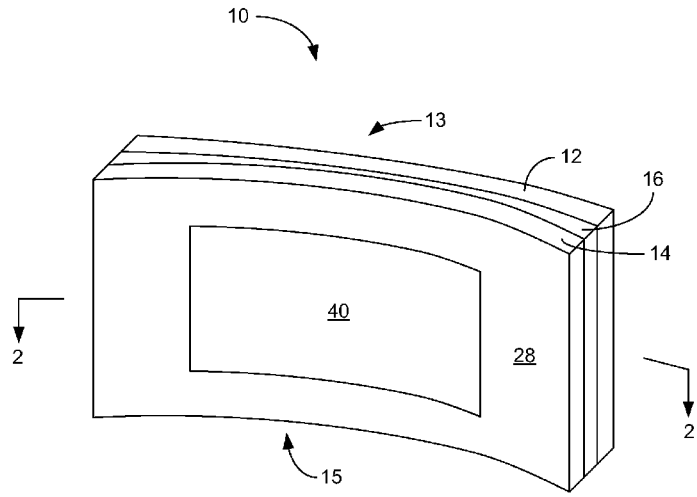
19 Claims, 6 Drawing Sheets