PALLIDOTOMY SURGICAL INSTRUMENT

Filed Nov. 28, 1958 2 Sheets-Sheet 1

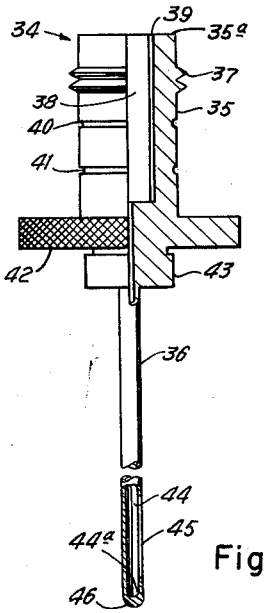

Fig. 4

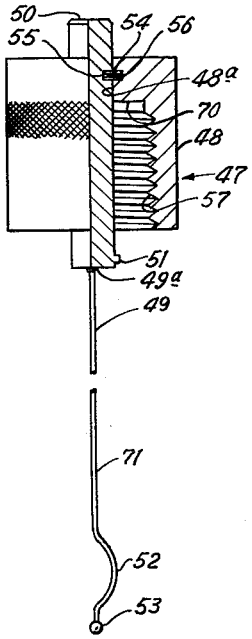

Fig. 5

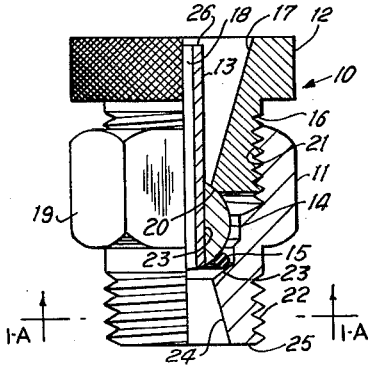

Fig. 1

Fig. 3

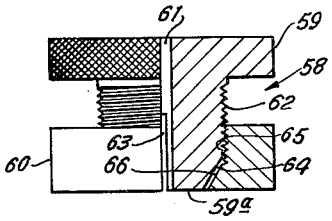

Fig. 6

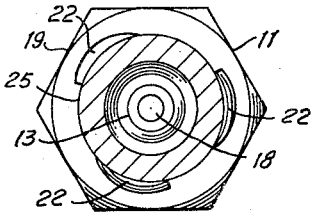

Fig. 1-A

INVENTORS
William W. McKinney
Robert A. Hasty
Leslie S. Noska

BY Clarence E. Keys
ATTORNEY