US006652170B1

(12) **United States Patent**
Arnold

(10) **Patent No.: US 6,652,170 B1**
(45) **Date of Patent: Nov. 25, 2003**

(54) **PORTABLE PRINTER AND DATA ENTRY DEVICE ASSEMBLY**

(75) Inventor: **Gregory B. Arnold**, Centerville, OH (US)

(73) Assignee: **Paxar Americas, Inc.**, Dayton, OH (US)

(*) Notice: Subject to any disclaimer, the term of this patent is extended or adjusted under 35 U.S.C. 154(b) by 364 days.

(21) Appl. No.: **09/665,813**

(22) Filed: **Sep. 20, 2000**

Related U.S. Application Data

(63) Continuation-in-part of application No. 09/384,675, filed on Aug. 27, 1999.

(51) **Int. Cl.**[7] **B41J 3/36**
(52) **U.S. Cl.** **400/88**; 400/693; 347/222
(58) **Field of Search** 400/88, 691, 693; 347/222

(56) **References Cited**

U.S. PATENT DOCUMENTS

D245,200	S	*	7/1977	Packard	D18/11
4,727,245	A	*	2/1988	Dobbins et al.	235/432 X
4,734,710	A	*	3/1988	Sato et al.	235/432 X
4,788,658	A	*	11/1988	Hanebuth	361/684
5,047,615	A	*	9/1991	Fukumoto et al.	235/432
5,057,676	A	*	10/1991	Komaki	235/432
5,237,487	A	*	8/1993	Dittmer et al.	361/729
5,371,348	A	*	12/1994	Kumar et al.	235/472.02
5,468,947	A	*	11/1995	Danielson et al.	235/472.02
5,483,624	A		1/1996	Christopher et al.	395/117
5,486,259	A		1/1996	Goodwin et al.	156/384
5,488,558	A	*	1/1996	Ohki	701/207
5,808,283	A	*	9/1998	Stanton et al.	235/432 X
5,816,725	A	*	10/1998	Sherman et al.	235/472.01 X
5,930,770	A	*	7/1999	Edgar	235/462.43 X
6,010,067	A	*	1/2000	Elbaum	235/380
6,195,589	B1	*	2/2001	Ketcham	700/28

FOREIGN PATENT DOCUMENTS

EP	0 191 495		8/1986	
EP	0 199 252		10/1986	
EP	0 200 945		11/1986	
EP	0 250 910		1/1988	
JP	5-108522	*	4/1993	
JP	11138911 A	*	5/1999	B41J/3/36
JP	2000025304 A	*	1/2000	B41J/29/38

OTHER PUBLICATIONS

Symbol Technologies, Inc. manual entitled SPT 1500, pp. 1 through 20, Copyright 1998.
Symbol Technologies, Inc. internet site, Product Information, SPT 1500 Palm Terminal Series, pp. 1 through 3, Mar. 23, 1999.
Axiohm Thermal Printer Mechanism, User's Manual THTP Series, Preliminary Issue, reference 3104660–FDE, Oct. 1998.
Symbol Technologies, Inc., internet site, MSR 3000 Magnetic Stripe Reader For SPT 1700 and PPT 2700 Pocketable Computers, pp. 1 through 3, Feb. 3, 2000.
Symbol Technologies, Inc., internet site, PPT 2700 Series Palm–size PC's, pp. 1 through 3, Feb. 3, 2000.
Fujitsu FTP 638 MCL100 (print head), two pages.
Publication, Semek, Model 908X, 608X, 408X (card reader), one page.
Solvepoint DockV™ and DockV Pro™ Instruction Guide, copyright 1999–2000, two pages.
PalmV(x)™ adapter for PalmIII accessories, one page.

* cited by examiner

Primary Examiner—Daniel J. Colilla
(74) *Attorney, Agent, or Firm*—Joseph J. Grass

(57) **ABSTRACT**

There is disclosed an assembly of a portable data entry device and a portable printer. The printer is hand-held and carries the data entry device. The data entry device includes a scanner and is located at the front portion of the printer. The printer has a space for accommodating a label roll and a print module which are located at the rear portion of the printer. The printer can be used with different data entry devices by use of adapters.
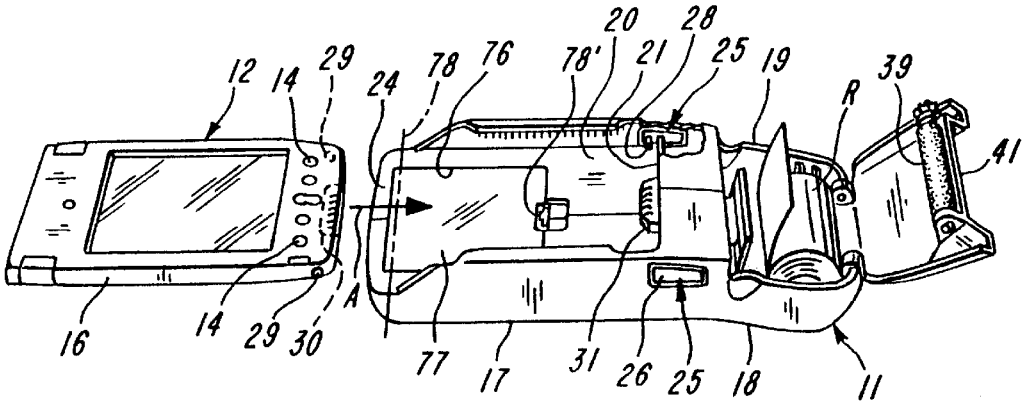
14 Claims, 5 Drawing Sheets