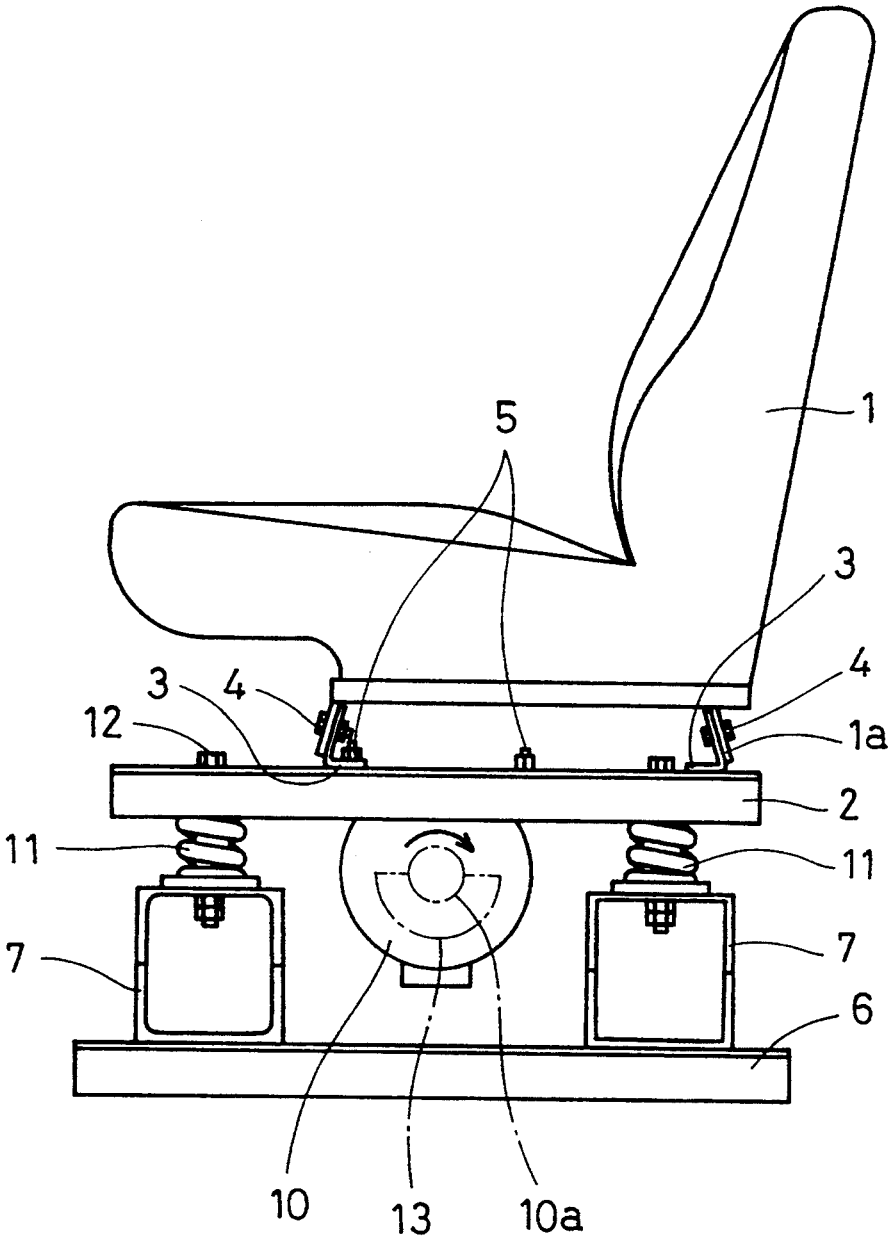FIG 1