US005348370A

United States Patent [19]

Fukuoka

[11] Patent Number: 5,348,370

[45] Date of Patent: Sep. 20, 1994

[54] **APPARATUS FOR VIBRATING SEATS**

[75] Inventor: **Masahiro Fukuoka**, Aichi, Japan

[73] Assignee: **Fukuoka Kagaku Ltd.**, Aichi, Japan

[21] Appl. No.: **987,481**

[22] Filed: **Dec. 4, 1992**

[51] **Int. Cl.**[5] **A47C 31/00**

[52] **U.S. Cl.** **297/217**; 297/311

[58] **Field of Search** 297/217, 463, 311, 330, 297/344.1

[56] **References Cited**

U.S. PATENT DOCUMENTS

1,615,615	1/1927	Cannon et al.	297/217 X
2,861,806	11/1958	Disney	297/217 X
3,628,829	12/1971	Heilig	297/217
3,865,430	2/1975	Tanus	297/217
3,948,379	4/1976	Warner	297/217 X
4,203,098	5/1980	Muncheryan	340/575
4,465,158	8/1984	Yamazaki et al.	180/271
5,022,708	6/1991	Nordella et al.	297/330 X
5,094,225	3/1992	Craw	128/24.3
5,113,851	5/1992	Gamba	297/330 X
5,129,704	7/1992	Kishi et al.	297/284.6 X

FOREIGN PATENT DOCUMENTS

3235373A1	3/1984	Fed. Rep. of Germany .	
2500382	8/1982	France .	
2525501	10/1983	France .	
0209925	11/1984	Japan	297/330
1445150	8/1976	United Kingdom	297/217

OTHER PUBLICATIONS

Patent Abstracts of Japan, Publication No. JP3112728, May 14, 1991, Abstract vol. 015307.

Patent Abstracts of Japan, Publication No. JP60173402, Sep. 6, 1985, Abstract vol. 010019.

Patent Abstracts of Japan, Publication No. JP63140141, Jun. 11, 1988, Abstract vol. 012386.

European Search Report.

Primary Examiner—Kenneth J. Dorner

Assistant Examiner—Milton Nelson, Jr.

Attorney, Agent, or Firm—Armstrong, Westerman, Hattori, McLeland & Naughton

[57] **ABSTRACT**

A driver's seat having a vibration generator connected to the driver's seat and controls for turning the vibration generator on and off for vibrating the driver's seat so that when a driver feels drowsiness coming on, the driver can operate the controls for switching on-off the vibration generator so that the driver's seat can be vibrated and prevent the driver from dozing during driving and prevent an accident from occurring.
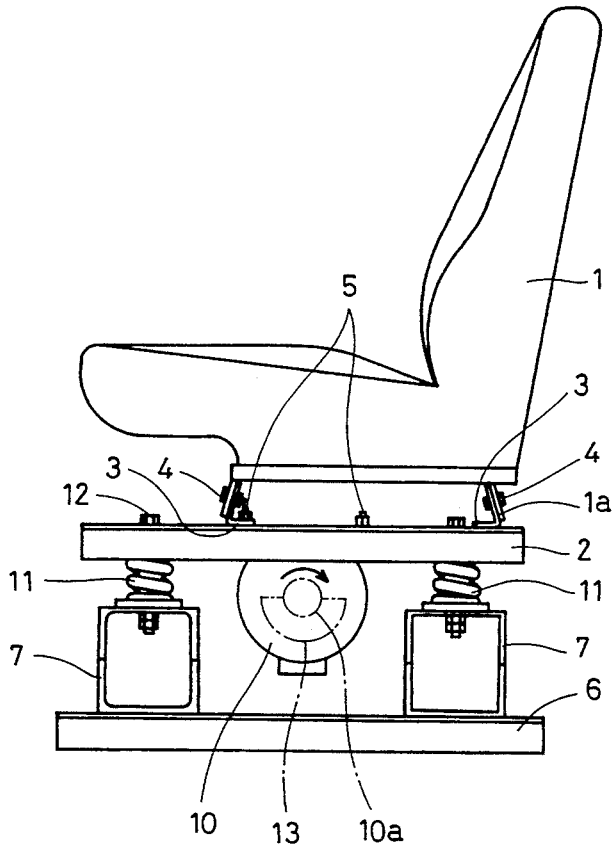
5 Claims, 22 Drawing Sheets