US009543470B2

(12) **United States Patent**
Hwang et al.

(10) **Patent No.: US 9,543,470 B2**
(45) **Date of Patent: Jan. 10, 2017**

(54) **SEMICONDUCTOR LIGHT EMITTING DEVICE**

(71) Applicant: **SAMSUNG ELECTRONICS CO., LTD.**, Suwon-si, Gyeonggi-do (KR)

(72) Inventors: **Kyung Wook Hwang**, Hwaseong-si (KR); **Jae Hyeok Heo**, Suwon-si (KR); **Joong Kon Son**, Seoul (KR)

(73) Assignee: **SAMSUNG ELECTRONICS CO., LTD.**, Suwon-si, Gyeonggi-Do (KR)

(*) Notice: Subject to any disclaimer, the term of this patent is extended or adjusted under 35 U.S.C. 154(b) by 0 days.

(21) Appl. No.: **14/452,309**

(22) Filed: **Aug. 5, 2014**

(65) **Prior Publication Data**

US 2015/0041822 A1 Feb. 12, 2015

(30) **Foreign Application Priority Data**

Aug. 6, 2013 (KR) 10-2013-0092956

(51) **Int. Cl.**
H01L 33/10 (2010.01)
H01L 33/24 (2010.01)

(52) **U.S. Cl.**
CPC ***H01L 33/10*** (2013.01); *H01L 33/24* (2013.01)

(58) **Field of Classification Search**
CPC H01L 33/60
USPC 257/98
See application file for complete search history.

(56) **References Cited**

U.S. PATENT DOCUMENTS

5,939,732 A * 8/1999 Kurtz H01L 33/105 257/103
6,372,608 B1 4/2002 Shimoda et al.
6,376,859 B1 * 4/2002 Swanson H01L 21/02203 257/49
6,645,830 B2 11/2003 Shimoda et al.
6,683,367 B1 * 1/2004 Stalmans et al. 257/618
RE38,466 E 3/2004 Inoue et al.
6,818,465 B2 11/2004 Biwa et al.
6,818,530 B2 11/2004 Shimoda et al.
6,858,081 B2 2/2005 Biwa et al.
6,967,353 B2 11/2005 Suzuki et al.
7,002,182 B2 2/2006 Okuyama et al.
7,084,420 B2 8/2006 Kim et al.
7,087,932 B2 8/2006 Okuyama et al.
7,154,124 B2 12/2006 Han et al.
7,208,725 B2 4/2007 Sherrer et al.
7,288,758 B2 10/2007 Sherrer et al.
7,319,044 B2 1/2008 Han et al.
(Continued)

FOREIGN PATENT DOCUMENTS

KR 10-1994-0001472 A 1/1994
KR 10-1999-0011945 A 2/1999
(Continued)

Primary Examiner — Daniel Whalen
Assistant Examiner — Suberr Chi
(74) *Attorney, Agent, or Firm* — F. Chau & Associates, LLC

(57) **ABSTRACT**

A semiconductor light emitting device includes a substrate, a reflective layer and a light emitting structure. The reflective layer includes at least two porous layers alternately disposed on the substrate and having different porosities. The light emitting structure is disposed on the reflective layer and includes a first conductivity-type semiconductor layer, an active layer and a second conductivity-type semiconductor layer.
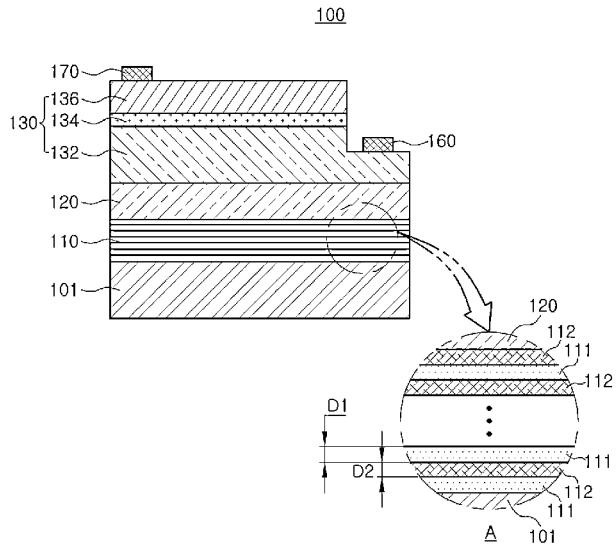
14 Claims, 15 Drawing Sheets