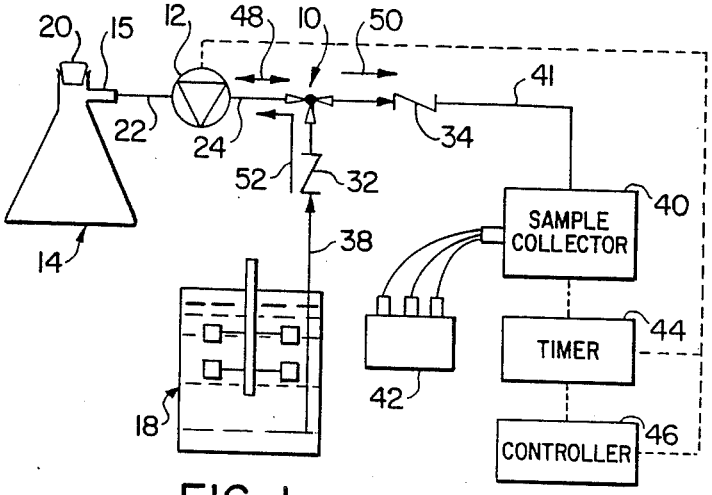
20
15
12
48
10
50
41
22
24
34
52
32
40
SAMPLE COLLECTOR
14
38
44
TIMER
42
18
46
CONTROLLER

FIG. 1

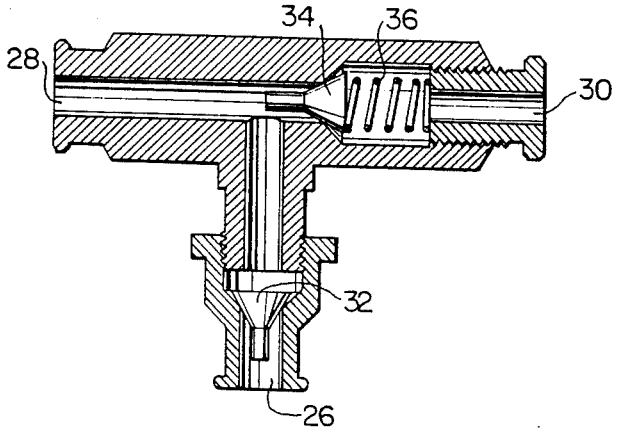
34
36
28
30
32
26

FIG. 2