United States Patent [19]

Fujisaku

[11] **Patent Number: 4,940,970**

[45] **Date of Patent: Jul. 10, 1990**

[54] **CRT DISPLAY DEVICE WITH A PICTURE-SHIFTING CIRCUIT**

[75] Inventor: **Kiminori Fujisaku,** Inagi, Japan

[73] Assignee: **Fujitsu Limited,** Kawasaki, Japan

[21] Appl. No.: **346,308**

[22] Filed: **May 2, 1989**

Related U.S. Application Data

[63] Continuation of Ser. No. 220,437, Jul. 13, 1988, abandoned, which is a continuation of Ser. No. 20,199, Feb. 27, 1987, abandoned, which is a continuation of Ser. No. 393,532, Jun. 30, 1982, abandoned.

[30] **Foreign Application Priority Data**

Jun. 30, 1981 [JP] Japan 56-100508

[51] **Int. Cl.**[5] **G09G 1/16**

[52] **U.S. Cl.** **340/726;** 340/724

[58] **Field of Search** 340/721, 723, 724, 725, 340/726, 792

[56] **References Cited**

U.S. PATENT DOCUMENTS

4,068,225	1/1978	Lee	340/724
4,129,859	12/1978	Iwamura et al.	340/724 X
4,201,983	5/1980	Magerl et al.	340/724 X
4,246,578	1/1981	Kawasaki et al.	340/724 X
4,249,172	2/1981	Watkins et al.	340/792 X
4,342,991	8/1982	Pope et al.	340/792 X
4,491,834	1/1985	Oguchi	340/723 X
4,618,858	10/1986	Belch	340/721

Primary Examiner—Alvin Oberley

Attorney, Agent, or Firm—Staas & Halsey

[57] **ABSTRACT**

A CRT display device with a picture-rearranging circuit in which a display address for accessing a memory to display data stored in the memory is calculated at a high speed by hardware, i.e., a calculator, which counts values from an address counter or a reading or writing address from a microprocessing unit and an offset address generated from the microprocessing unit, the offset address being used to change the picture-arrangement on a display panel.
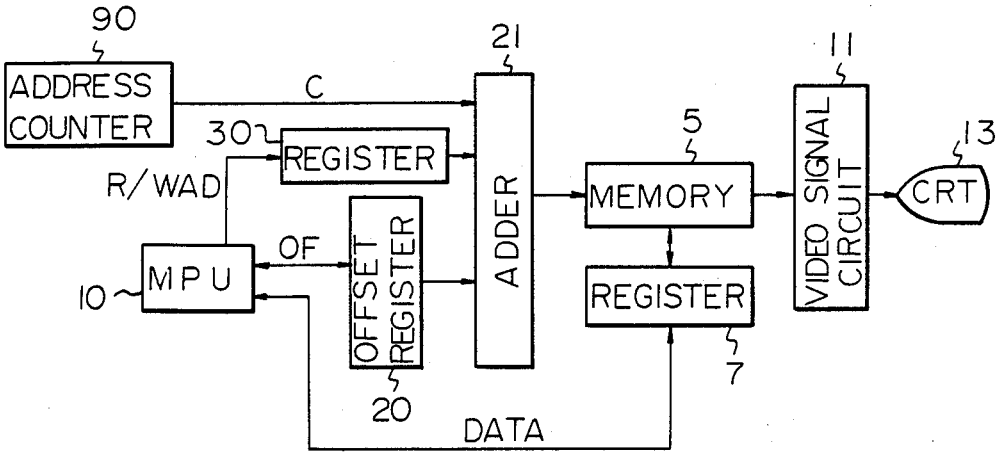
6 Claims, 2 Drawing Sheets