United States Patent [19]

Portney

[11] **Patent Number: 4,932,970**

[45] **Date of Patent: Jun. 12, 1990**

[54] **OPHTHALMIC LENS**

[75] Inventor: **Valdemar Portney**, Irvine, Calif.

[73] Assignee: **Allergan, Inc.**, Irvine, Calif.

[21] Appl. No.: **195,135**

[22] Filed: **May 17, 1988**

[51] **Int. Cl.**[5] **A61F 2/16**; A61F 2/14; G02C 7/02; G02C 7/04

[52] **U.S. Cl.** ..... **623/6**; 623/5; 351/160 R; 351/176

[58] **Field of Search** ..... 623/6, 5, 4; 351/176, 351/160 R, 160 H, 161, 160

[56] **References Cited**

U.S. PATENT DOCUMENTS

2,077,092	4/1937	Broder	351/176
3,735,685	5/1973	Plummer	351/176 X
4,010,496	3/1977	Neefe	623/6
4,162,122	7/1979	Cohen	351/161
4,210,391	7/1980	Cohen	351/161
4,338,005	7/1982	Cohen	351/161
4,340,283	7/1982	Cohen	351/161
4,402,579	9/1983	Poler	623/6 X
4,409,691	10/1983	Levy	623/6
4,500,382	2/1985	Foster	156/272.8
4,504,982	3/1985	Burk	623/6
4,673,406	6/1987	Schlegel	623/6
4,787,903	11/1988	Grendahl	623/6
4,828,558	5/1989	Kelman	623/6

FOREIGN PATENT DOCUMENTS

3439551	4/1986	Fed. Rep. of Germany .	
WO86/03961	7/1986	PCT Int'l Appl.	623/6

OTHER PUBLICATIONS

Gupta, Pramod Kumar, Theoretical Analysis of the Fresnel Lens as a Function of Design Parameters, Applied Energy 0306-2619/81/0009-0301, 1981, pp. 302-310.

Egger, John R., Use of Fresnel Lenses in Optical Systems: Some Advantages and Limitations, SPIE vol. 193, Optical Systems Engineering, 1979, pp. 64-69.

Vanderwerf, Dennis, Approximating the Fresnel Lens, Electro-Optical Systems Design, Feb. 1982, pp. 47-52.

Farberov/Mironenko, Manufacturing Fresnel Lenses for Cameras, Sov. J. Opt. Technol. 50(3), Mar. 1983, pp. 186-188.

Primary Examiner—Ronald L. Frinks

Attorney, Agent, or Firm—Gordon L. Peterson; Loyal M. Hanson

[57] **ABSTRACT**

An ophthalmic lens having a size, shape, and composition adapted to be supported by the human eye in the optical path of the eye as an intraocular, contact, or corneal implant lens, includes a biocompatible lens body having a size and shape adapted to be supported by a human eye in the optical path of the eye. An optical portion of the lens body has anterior and posterior surfaces and a grooved portion defining a modified Fresnel or echelon lens pattern in at least one of the anterior and posterior surfaces. The modified echelon lens pattern includes annular zones that are configured so that at least some of the annular zones exhibit optical characteristics that vary circumferentially in order to at least partially correct for astigmatism.
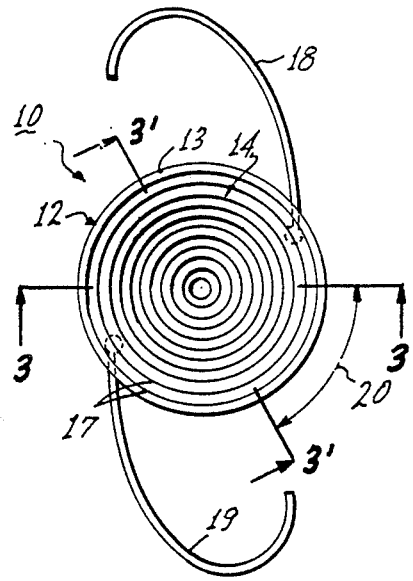
32 Claims, 2 Drawing Sheets