May 17, 1938. D. H. ROW 2,117,770

CONTACT GLASS CONSTRUCTION

Filed May 29, 1936

FIG. 1

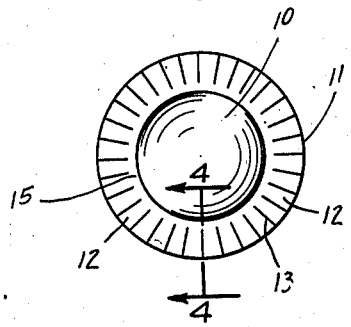

FIG. 2

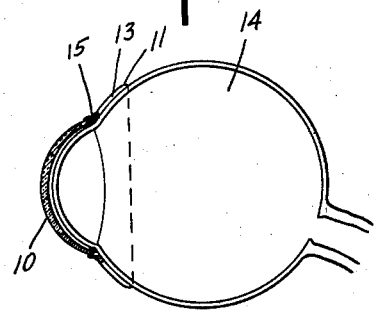

FIG. 3

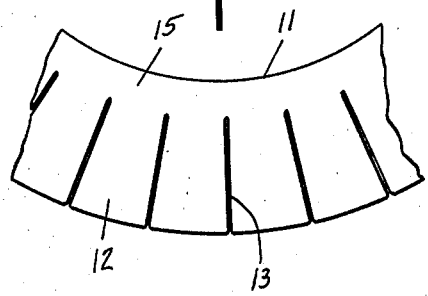

FIG. 4

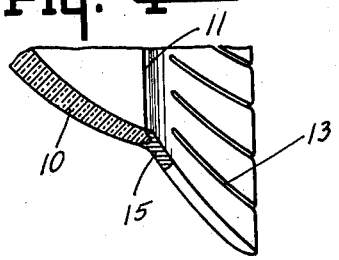

FIG. 5

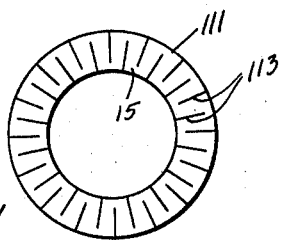

FIG. 6

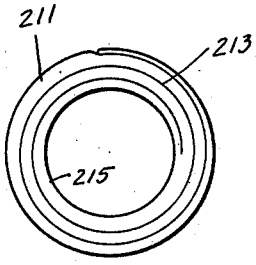

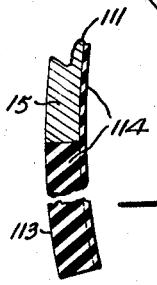

FIG. 7

INVENTOR.
DUNN HAMILTON ROW.

BY
Lockwood Goodsmith & Gale
ATTORNEYS.