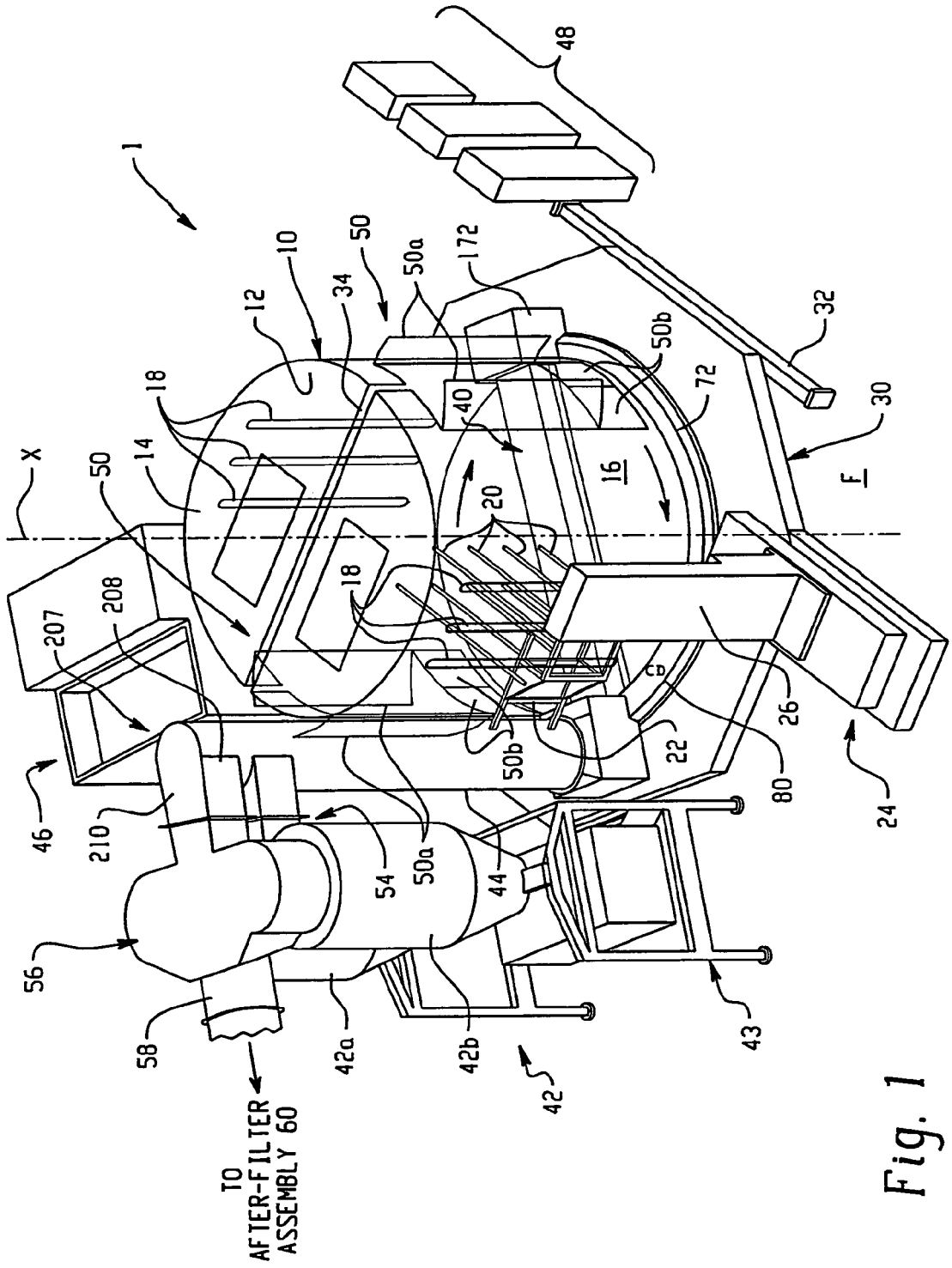
1
10
12
14
16
18
20
22
24
26
30
32
34
40
42
42a
42b
43
44
46
48
50
50a
50b
54
56
58
72
80
172
207
208
210
X
F
TO
AFTER-FILTER
ASSEMBLY 60

Fig. 1