Sept. 3, 1940. J. CHASE 2,213,270

MANIKIN

Filed July 1, 1939 2 Sheets-Sheet 1

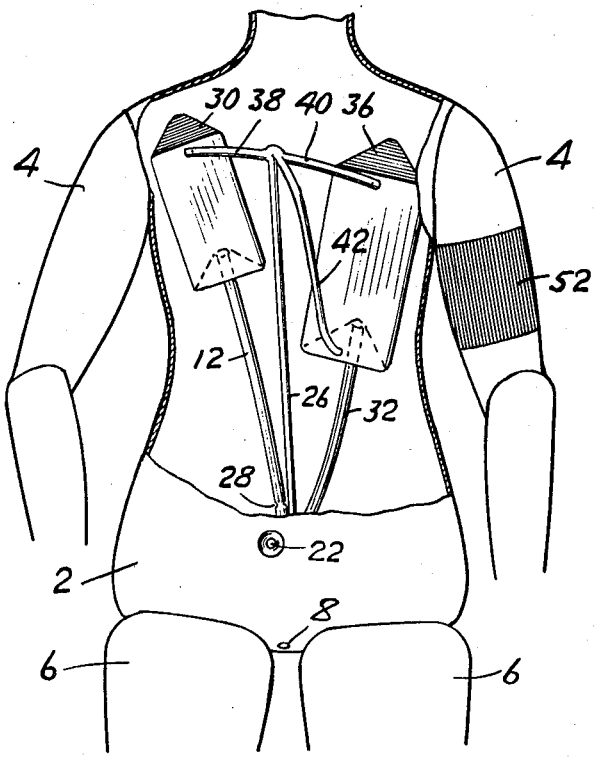

FIG. 1.

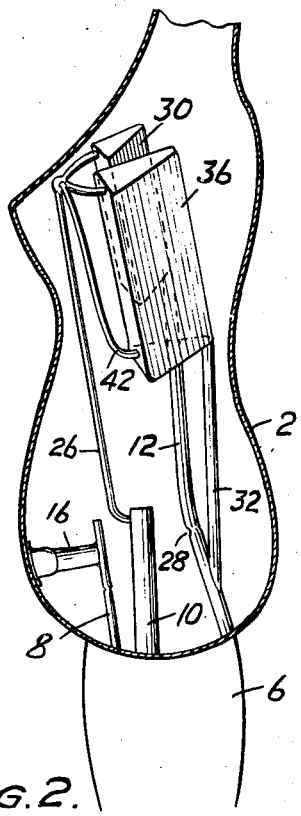

FIG. 2.

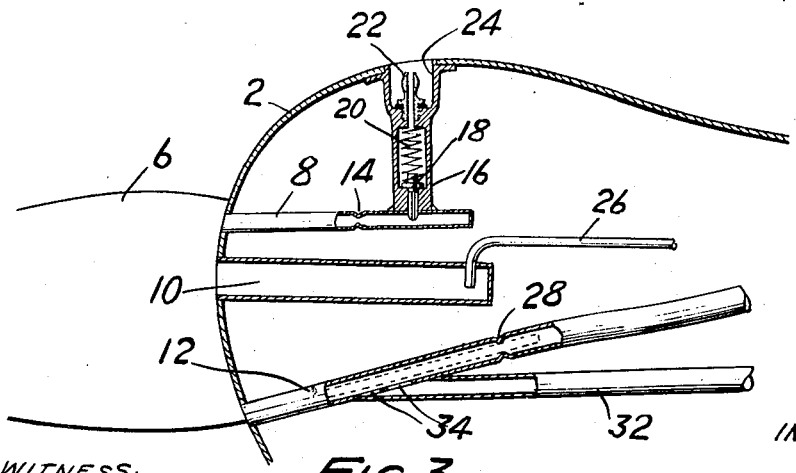

FIG. 3.

WITNESS:

INVENTOR

Julian Chase

BY

ATTORNEYS.