US005712870A

United States Patent [19]

Petrick

[11] **Patent Number: 5,712,870**

[45] **Date of Patent: Jan. 27, 1998**

[54] **PACKET HEADER GENERATION AND DETECTION CIRCUITRY**

[75] Inventor: **Al Petrick**, Orlando, Fla.

[73] Assignee: **Harris Corporation**, Melbourne, Fla.

[21] Appl. No.: **509,462**

[22] Filed: **Jul. 31, 1995**

[51] **Int. Cl.**[6] **H04B 15/00**

[52] **U.S. Cl.** **375/206**; 375/200; 375/279; 375/308; 370/206; 370/320

[58] **Field of Search** 375/200, 206, 375/207, 208, 219, 220, 261, 298, 279, 280, 308, 329, 364, 367, 332; 370/206, 207, 320, 335, 342, 349, 350, 465, 466, 474

[56] **References Cited**

U.S. PATENT DOCUMENTS

5,179,574 1/1993 Watanabe et al. 375/200
5,371,734 12/1994 Fischer 370/331
5,377,232 12/1994 Davidov et al. 375/206
5,553,095 9/1996 Engdahl et al. 375/222
5,596,600 1/1997 Dimos et al. 375/206

Primary Examiner—Wellington Chin
Assistant Examiner—Congvan Tran
Attorney, Agent, or Firm—Rogers & Killeen

[57] **ABSTRACT**

A method and apparatus for receiving and transmitting direct sequence spread spectrum signals uses a single integrated device for converting and demodulating an RF signal into a serial data signal. Critical timing relationships during the acquisition and demodulation of the received signal are satisfied by the use of an integrated circuit specially designed to perform all operations needed to convert the physical signal to an media access circuit level data signal.
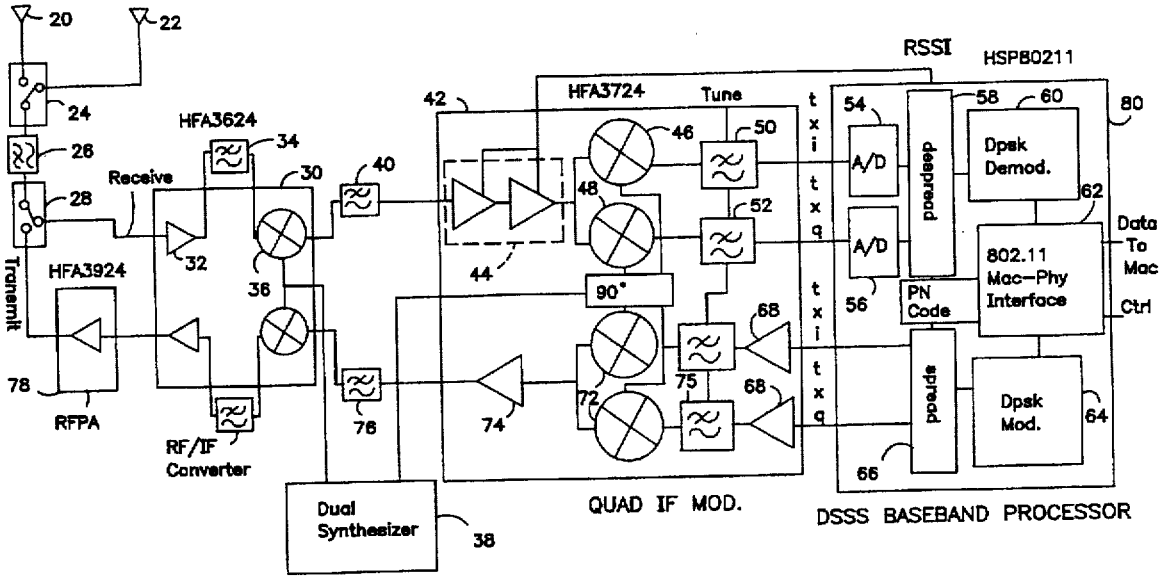
20 Claims, 3 Drawing Sheets