FIG. 1

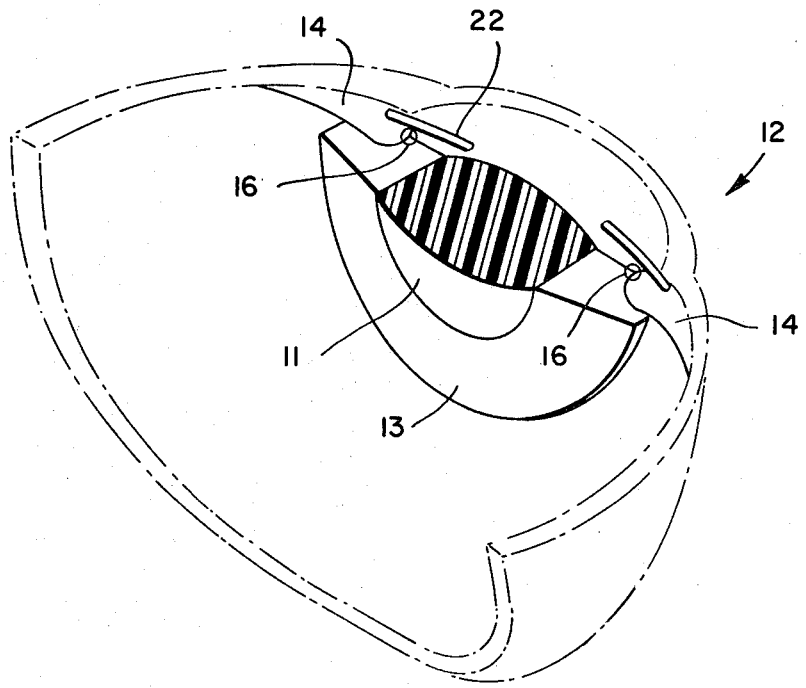

FIG. 2

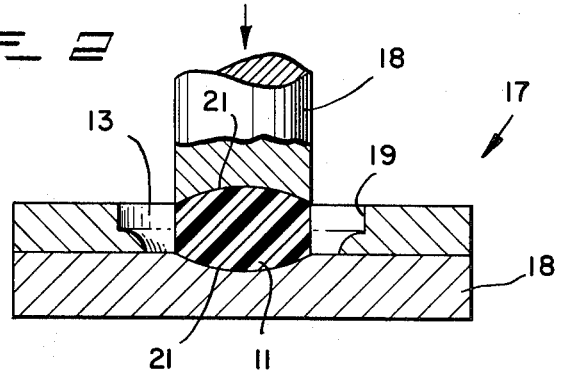

INVENTOR.
R. E. DEITRICK
BY
W L Williams
ATTORNEY