US00D511770S

(12) United States Design Patent

Chung

(10) Patent No.: US D511,770 S
(45) Date of Patent: ** Nov. 22, 2005

(54) **NETWORK DEVICE**

(75) Inventor: **Ming-Tsai Chung**, Hsinchu (TW)

(73) Assignee: **D-Link Corporation**, Hsinchu (TW)

(**) Term: **14 Years**

(21) Appl. No.: **29/200,963**

(22) Filed: **Mar. 9, 2004**

(51) **LOC (8) Cl.** **14-03**
(52) **U.S. Cl.** **D14/240**
(58) **Field of Search** D14/240, 349, D14/353, 242, 243, 248, 256, 299, 358, 433, 356, 357; 455/151.1–151.4, 550–575, 569.1–569.2; D13/184, 147, 168; 379/433.01–13, 434, 419, 418; 220/4.02

(56) **References Cited**

U.S. PATENT DOCUMENTS

6,085,925 A * 7/2000 Chung 220/4.02
6,328,612 B1 * 12/2001 Chung 439/717
D463,426 S * 9/2002 Cheng D14/356
D486,479 S * 2/2004 Chung D14/240
D486,824 S * 2/2004 Chung D14/356
D487,458 S * 3/2004 Gentil et al. D14/356
D490,402 S * 5/2004 Jung et al. D14/240
6,735,450 B1 * 5/2004 Remmert 455/550.1
D492,307 S * 6/2004 Aqqad et al. D14/356
D500,755 S * 1/2005 Chung D14/240

* cited by examiner

Primary Examiner—Charles A. Rademaker
(74) *Attorney, Agent, or Firm*—Bacon & Thomas PLLC

(57) **CLAIM**

The ornamental design for network device, as shown and described.

DESCRIPTION

FIG. **1** is a perspective view of network device showing my design;
FIG. **2** is a front elevational view thereof;
FIG. **3** is a rear elevational view thereof;
FIG. **4** is a left side elevational view thereof;
FIG. **5** is a right side elevational view thereof;
FIG. **6** is a top plan view thereof; and
FIG. **7** is a bottom plan view thereof; and,
FIG. **8** is a perspective view of the network device shown in FIGS. **1** through **7** in an open condition.
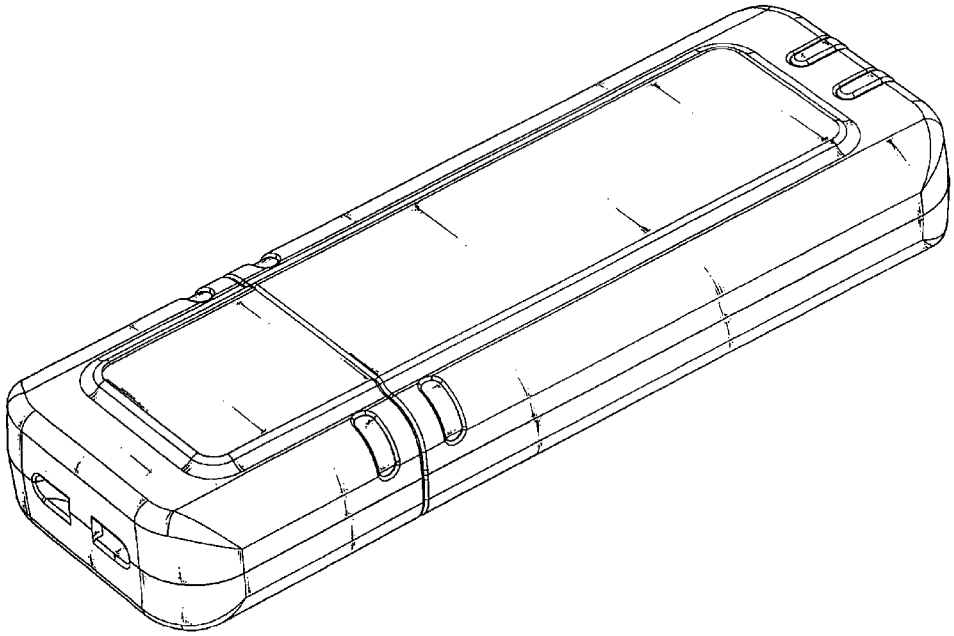
1 Claim, 6 Drawing Sheets