Sept. 20, 1971 R. D. ZIMMERLY 3,606,270

CONTINUOUS POWER BLENDER

Filed May 14, 1970

Fig. 1

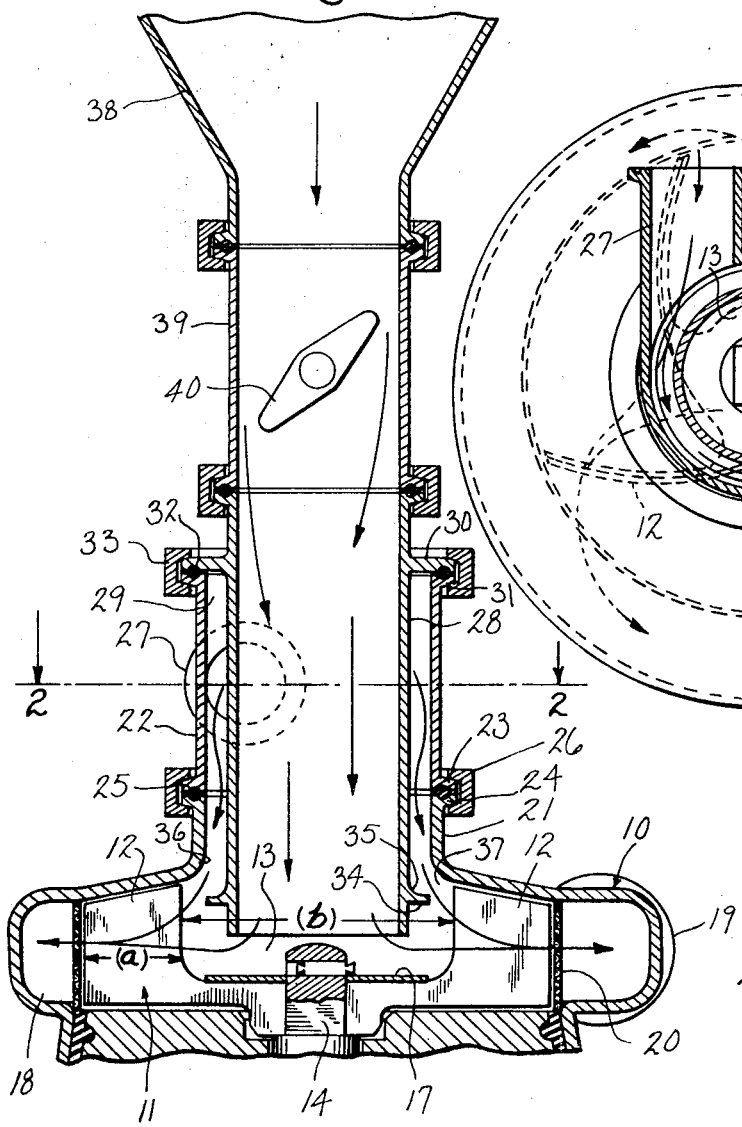

Fig. 2

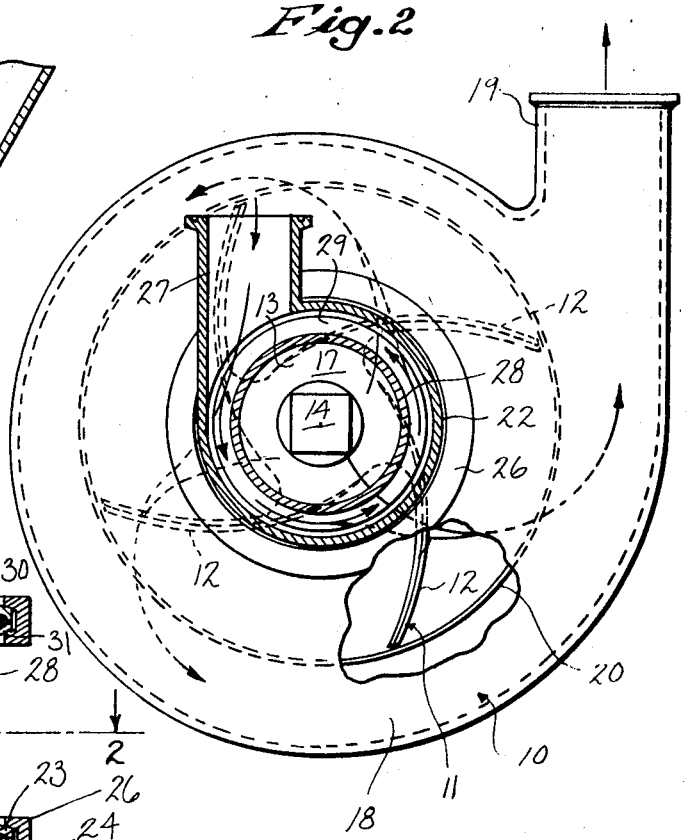

Fig. 4

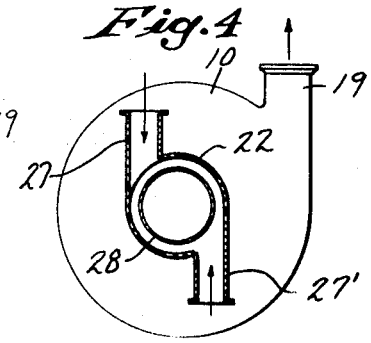

Fig. 3

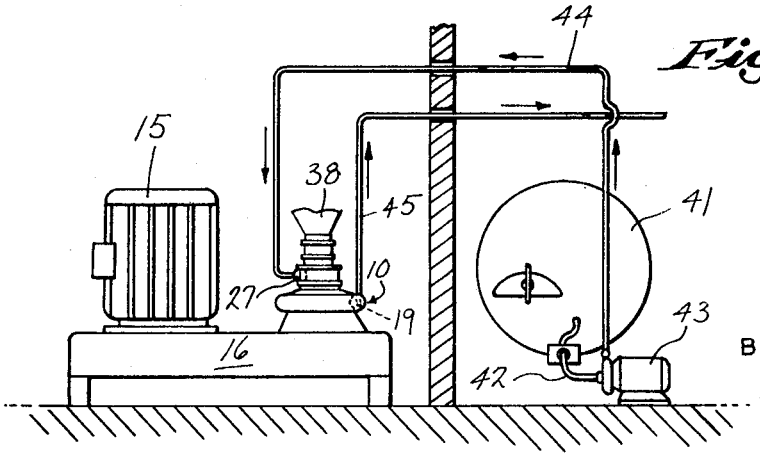

INVENTOR
ROBERT D. ZIMMERLY

BY Morsell & Morsell

ATTORNEYS