EDUCATIONAL APPARATUS

Filed May 4, 1966 5 Sheets-Sheet 2

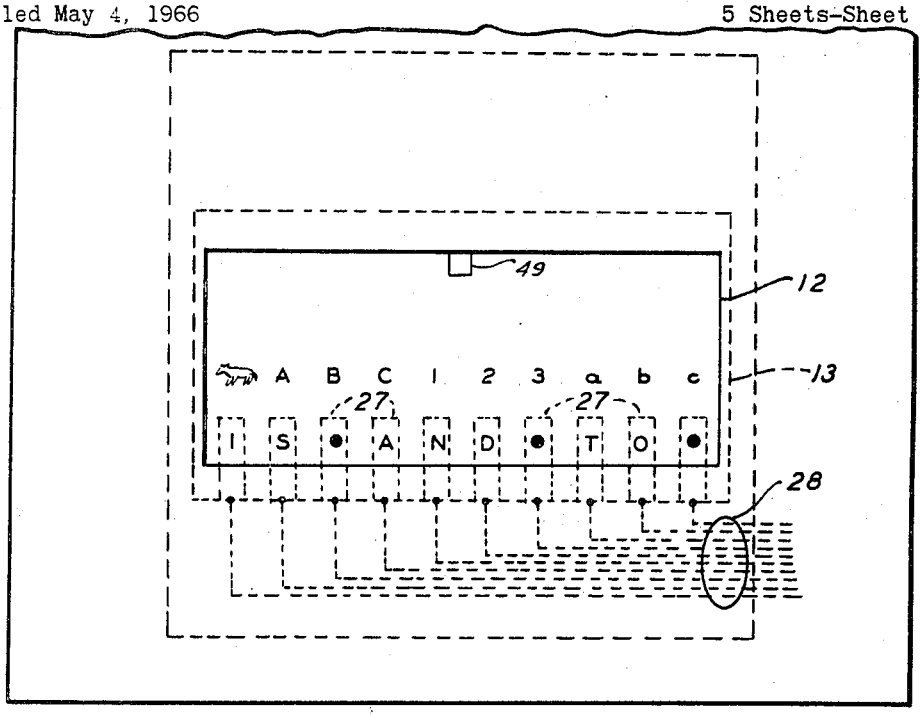

FIG. 4

FIG. 7

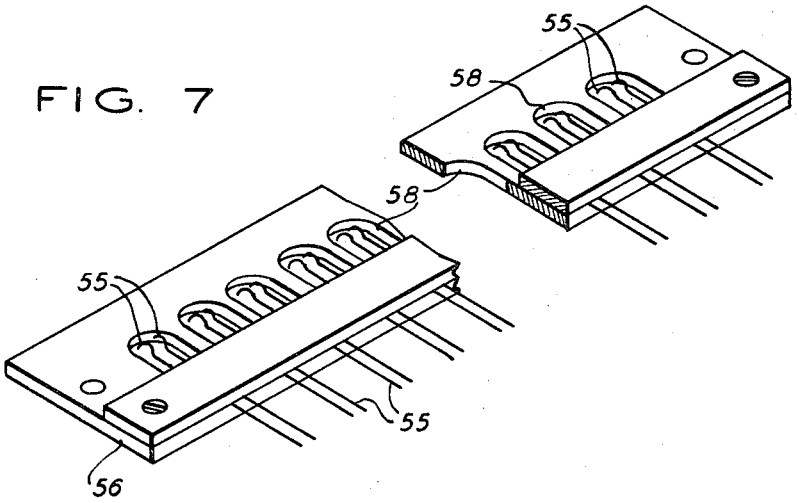

INVENTOR
THOMAS J. GAVEN
George H. Fritzinger
BY AGENT