EDUCATIONAL APPARATUS

Filed May 4, 1966 5 Sheets-Sheet 1

FIG. 1

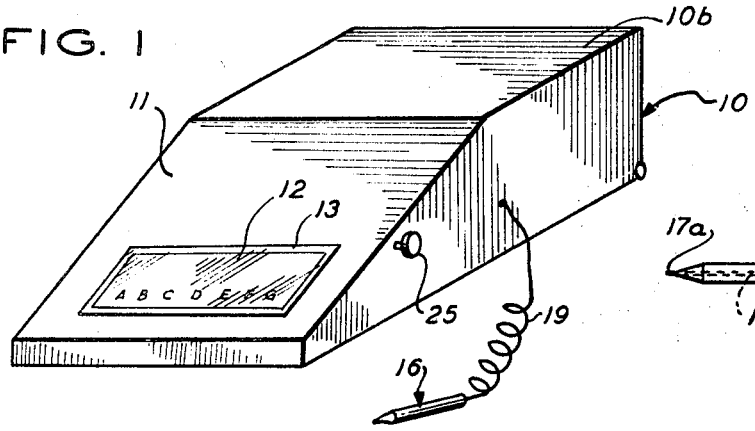

FIG. 1a

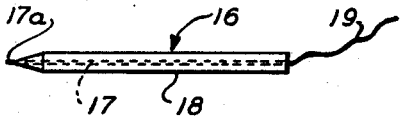

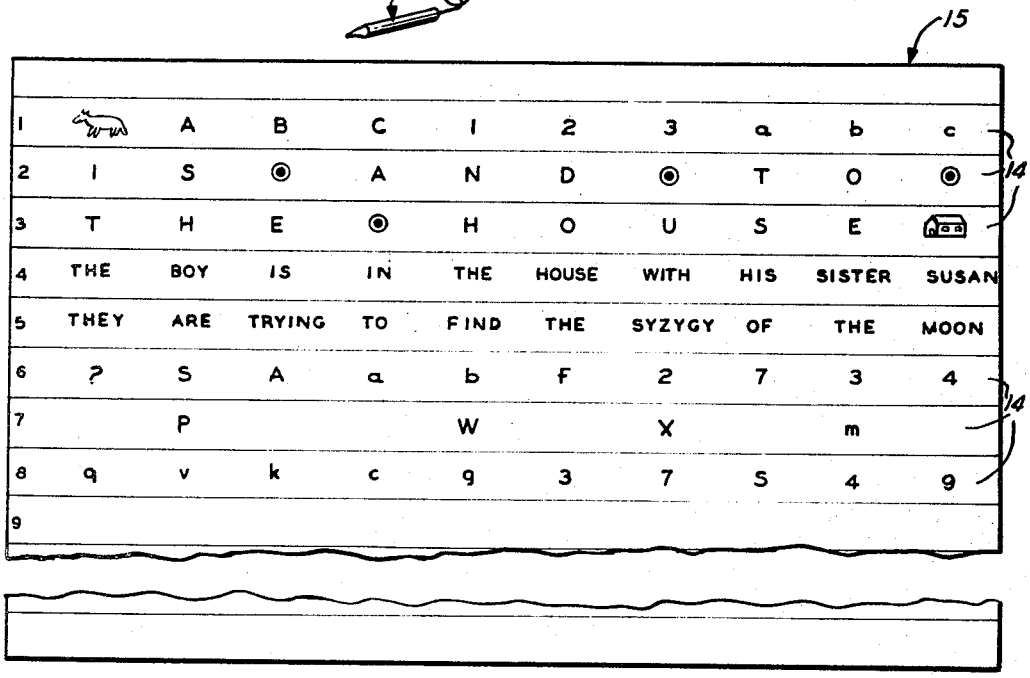

FIG. 3

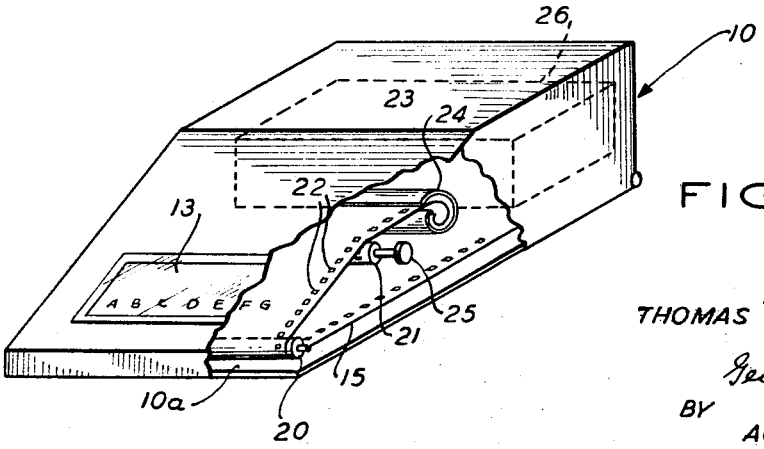

FIG. 2

INVENTOR
THOMAS J. GAVEN
George H. Fritzinger
BY
AGENT