United States Patent [19]

Lawrie

[11] **Patent Number: 4,880,969**

[45] **Date of Patent: Nov. 14, 1989**

[54] **OPTICAL TOUCH PANEL WITH HEAT SINK**

[75] Inventor: **George S. Lawrie**, Mississauga, Canada

[73] Assignee: **Litton Systems, Inc.**, Beverly Hills, Calif.

[21] Appl. No.: **198,284**

[22] Filed: **Aug. 26, 1988**

Related U.S. Application Data

[63] Continuation of Ser. No. 858,364, Apr. 30, 1986, abandoned.

[51] **Int. Cl.**[4] **G09G 1/00**; G01V 9/04

[52] **U.S. Cl.** **250/221**; 340/712; 341/31

[58] **Field of Search** 250/221, 229, 561; 340/555, 556, 557, 644, 825.81, 825.82, 825.83, 712; 341/31

[56] **References Cited**

U.S. PATENT DOCUMENTS

3,392,763	1/1976	Weinstein	250/221
3,398,290	8/1968	Basehore et al.	250/221
3,526,775	9/1970	Friedrich et al.	250/221
3,623,047	11/1971	Stallebrass	340/644
3,673,327	6/1972	Johnston et al.	250/221
3,816,745	6/1974	Primm et al.	250/221
3,851,328	11/1974	Sottile et al.	340/337
3,862,415	1/1975	Harnden et al.	250/221
3,906,222	9/1975	Astier et al.	250/221
3,937,952	2/1976	Ripley et al.	341/31
3,956,745	5/1976	Ellis	340/825.83
4,021,119	5/1977	Stauffer	250/561
4,243,879	1/1981	Carroll et al.	250/221
4,254,333	3/1981	Bergstrom	250/221
4,267,443	5/1981	Carroll et al.	250/221
4,306,147	12/1981	Fukuyama et al.	250/221
4,384,201	5/1983	Carroll et al.	250/221
4,436,972	3/1984	Scanlon	340/644
4,467,193	8/1984	Carroll	250/216
4,607,160	8/1986	Sakakino	250/229

Primary Examiner—Edward P. Westin
Attorney, Agent, or Firm—Lynn & Lynn

[57] **ABSTRACT**

A programmable touch panel comprises an interactive control/display panel having the capability of entering and updating information to a host computer via a plurality of multifunction programmable keys. An optical switch is associated with each key for operator selection. Each key includes a light source mounted to a circuit board for sending a light beam through a hole in a heat sink toward a reflector that directs the beam across a touch panel. A second reflector then directs the beam through a second hole in the heat sink toward a detector mounted on the circuit board.
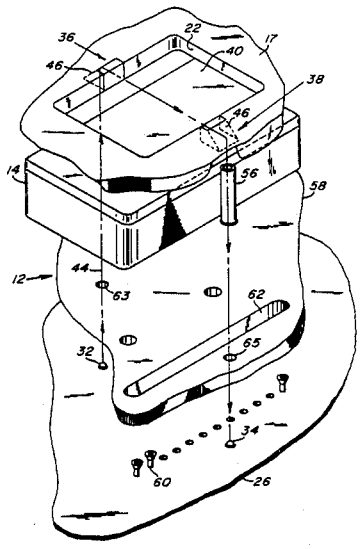
14 Claims, 7 Drawing Sheets