United States Patent [19]

Fuchs

[11] **3,975,469**

[45] **Aug. 17, 1976**

[54] **DEVICE FOR REVOLVING LIQUIDS AND SUPPLYING GAS THERETO**

[75] Inventor: **Hubert K. E. Fuchs,** Mayen, Germany

[73] Assignee: **The De Laval Separator Company,** Poughkeepsie, N.Y.

[22] Filed: **Jan. 17, 1975**

[21] Appl. No.: **542,040**

[30] **Foreign Application Priority Data**

Jan. 23, 1974 Austria 536/74

[52] **U.S. Cl.** **261/87;** 259/32; 261/91; 261/93; 261/DIG. 71; 416/176; 416/234

[51] **Int. Cl.**[2] **B01F 3/04**

[58] **Field of Search** ..... 261/85, 86, 87, 93, 261/121 R, 83, 84, 91, 28, 29, 31, DIG. 71; 259/30–32; 416/234, 176

[56] **References Cited**

UNITED STATES PATENTS

2,151,939	3/1939	Richardson	416/234
2,244,902	6/1941	Stich	261/93 X
2,928,661	3/1960	MacLaren	261/87 X
3,378,141	4/1968	Warman	261/93 X
3,438,890	4/1969	Neighbor	261/87 X
3,782,702	1/1974	King	261/87

FOREIGN PATENTS OR APPLICATIONS

193,813	12/1957	Netherlands	261/87
879,081	6/1953	Netherlands	261/93

Primary Examiner—Frank W. Lutter
Assistant Examiner—William Cuchlinski, Jr.
Attorney, Agent, or Firm—Cyrus S. Hapgood

[57] **ABSTRACT**

A device for revolving a liquid has a hollow shaft for supplying gas to the liquid, and the free end of the shaft is immersed in the liquid where it carries a propeller for revolving the liquid. The propeller comprises at least one screw-shaped vane, and at least part of the vane's surface forms an acute angle with the longitudinal axis of the hollow shaft, as seen from the free end of the shaft, the vane extending along at least two thirds of the circumference of the shaft.
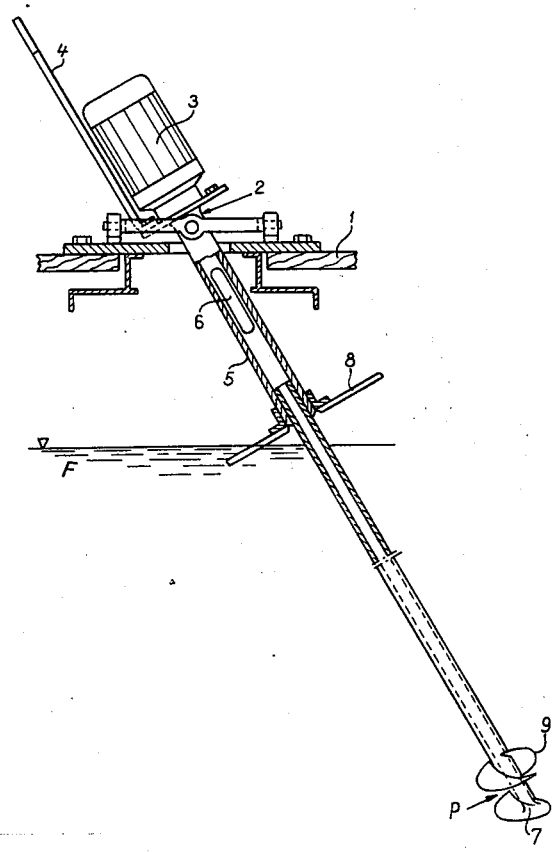
11 Claims, 15 Drawing Figures