US005874669A

United States Patent [19]

Ray

[11] **Patent Number: 5,874,669**

[45] **Date of Patent: Feb. 23, 1999**

[54] **SCANNING FORCE MICROSCOPE WITH REMOVABLE PROBE ILLUMINATOR ASSEMBLY**

[75] Inventor: **David J. Ray**, Mendon, N.Y.

[73] Assignee: **Raymax Technology, Inc.**, Agoura Hills, Calif.

[21] Appl. No.: **951,365**

[22] Filed: **Oct. 16, 1997**

[51] **Int. Cl.**[6] **G01B 5/28**

[52] **U.S. Cl.** **73/105**

[58] **Field of Search** 73/105; 250/306, 250/307

[56] **References Cited**

U.S. PATENT DOCUMENTS

Re. 34,489	12/1993	Hansma et al.	250/306
Re. 35,514	5/1997	Albrecht et al.	250/307
4,935,634	6/1990	Hansma et al.	250/306
5,025,658	6/1991	Elings et al.	73/105
5,144,833	9/1992	Amer et al.	73/105
5,189,906	3/1993	Elings et al.	73/105
5,231,286	7/1993	Kajimura et al.	250/306
5,245,863	9/1993	Kajimura et al.	73/105
5,260,824	11/1993	Okada et al.	250/306
5,388,452	2/1995	Harp et al.	73/105
5,394,741	3/1995	Kajimura et al.	73/105
5,406,833	4/1995	Yamamoto	73/105
5,440,920	8/1995	Jung et al.	73/105
5,463,897	11/1995	Prater et al.	73/105
5,481,908	1/1996	Gamble	73/105
5,496,999	3/1996	Linker et al.	250/306
5,524,479	6/1996	Harp et al.	73/105
5,560,244	10/1996	Prater et al.	73/105
5,569,918	10/1996	Wang	250/306
5,587,523	12/1996	Jung et al.	73/105
5,625,142	4/1997	Gamble	73/105

OTHER PUBLICATIONS

B. Gasser et al.; "Design of a 'Beetle–Type' Atomic Force Microscope Using The Beam Deflection Technique"; May 1996; pp. 1925–1929; Rev. Sci. Instruments 67(5).

Kees. O. Van Der Werf et al.; "Compact Stand–Alone Atomic Force Microscope", Oct. 1993; pp. 2892–2897; Rev. Sci. Instruments 64(10).

Steven M. Clark et al.; "A High Performance Scanning Force Microscope Head Design"; Apr. 1993; pp. 904–907; Rev. Sci. Instruments 64(4).

David R. Baselt et al.; "Scanned–Cantilever Atomic Force Microscope"; Apr. 1993; pp. 908–911; Rev. Sci. Instruments 64(4).

P.S. Jung et al.; "Novel Stationary–Sample Atomic Force Microscope With Beam–Tracking Lens"; 4 Feb. 1993; pp. 264–266; Eletronic Letters vol. 29 No. 3.

Y. Martin et al.; "Atomic Force Microscope–Force Mapping and Profiling on a Sub 100–Å Scale"; 15 May 1987; pp. 4723–4729; J. of Appl. Physics 61(10).

Primary Examiner—Hezron Williams
Assistant Examiner—Daniel S. Larkin

[57] **ABSTRACT**

A scanning force microscope employs a laser **(76)** which creates a laser beam **(26)**. The laser and a probe assembly **(24)** are mounted in a removable probe illuminator assembly **(22)**. The removable probe illumination assembly is mounted to the moving portion of a scanning mechanism. The scanning mechanism creates relative movement between the probe illuminator assembly and a sample **(28)**. The removal of the probe illuminator assembly permits alignment of said laser beam onto a cantilever **(30)** after removal of said illuminator assembly from the microscope. This prevents damage to, and shortens alignment time of, the microscope during replacement and alignment of the probe assembly.
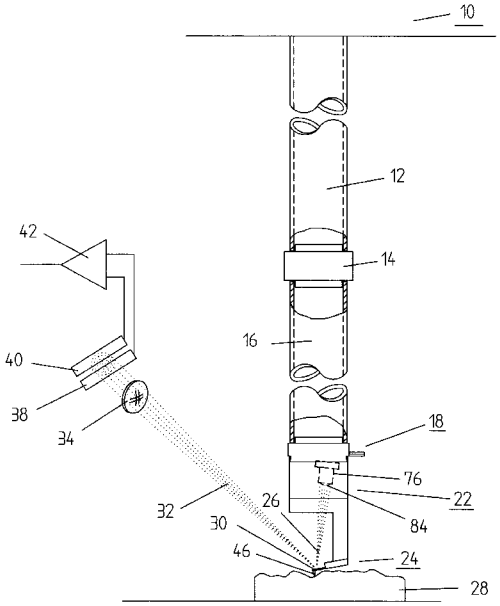
21 Claims, 8 Drawing Sheets