US008068269B2

(12) **United States Patent**
Djordjev

(10) **Patent No.: US 8,068,269 B2**
(45) **Date of Patent: *Nov. 29, 2011**

(54) **MICROELECTROMECHANICAL DEVICE WITH SPACING LAYER**

(75) Inventor: **Kostadin Djordjev**, San Jose, CA (US)

(73) Assignee: **QUALCOMM MEMS Technologies, Inc.**, San Diego, CA (US)

(*) Notice: Subject to any disclaimer, the term of this patent is extended or adjusted under 35 U.S.C. 154(b) by 0 days.

This patent is subject to a terminal disclaimer.

(21) Appl. No.: **12/566,510**

(22) Filed: **Sep. 24, 2009**

(65) **Prior Publication Data**

US 2010/0014148 A1 Jan. 21, 2010

Related U.S. Application Data

(63) Continuation of application No. 12/057,161, filed on Mar. 27, 2008, now Pat. No. 7,612,933.

(51) **Int. Cl.**
G02B 26/00 (2006.01)

(52) **U.S. Cl.** **359/290**; 359/291

(58) **Field of Classification Search** 59/290, 59/291

See application file for complete search history.

(56) **References Cited**

U.S. PATENT DOCUMENTS

2,590,906	A	4/1952	Tripp
2,677,714	A	5/1954	Auwarter
3,247,392	A	4/1966	Thelen
3,679,313	A	7/1972	Rosenberg
3,728,030	A	4/1973	Hawes
3,886,310	A	5/1975	Guldberg
3,955,190	A	5/1976	Teraishi
4,403,248	A	9/1983	te Velde
4,421,381	A	12/1983	Ueda et al.
4,441,789	A	4/1984	Pohlack
4,441,791	A	4/1984	Hornbeck
4,497,974	A	2/1985	Deckman et al.
4,498,953	A	2/1985	Cook et al.
4,560,435	A	12/1985	Brown et al.
4,655,554	A	4/1987	Armitage
4,779,959	A	10/1988	Saunders
4,786,128	A	11/1988	Birnbach
4,859,060	A	8/1989	Katagiri et al.
4,925,259	A	5/1990	Emmett
4,954,789	A	9/1990	Sampsell
4,956,619	A	9/1990	Hornbeck
4,973,131	A	11/1990	Carnes
4,982,184	A	1/1991	Kirkwood

(Continued)

FOREIGN PATENT DOCUMENTS

DE 10 2006 039 071 2/2008

(Continued)

OTHER PUBLICATIONS

IPRP dated Mar. 16, 2010 for PCT/US09/037881.

(Continued)

Primary Examiner — Scott J Sugarman
Assistant Examiner — James Jones
(74) *Attorney, Agent, or Firm* — Knobbe, Martens, Olson & Bear LLP

(57) **ABSTRACT**

An interferometric modulating device is provided with a spacing layer positioned between the fixed reflector and the electrode. The spacing layer prevents shorting between the movable reflector and the electrode and provides a filtering cavity to improve color saturation.
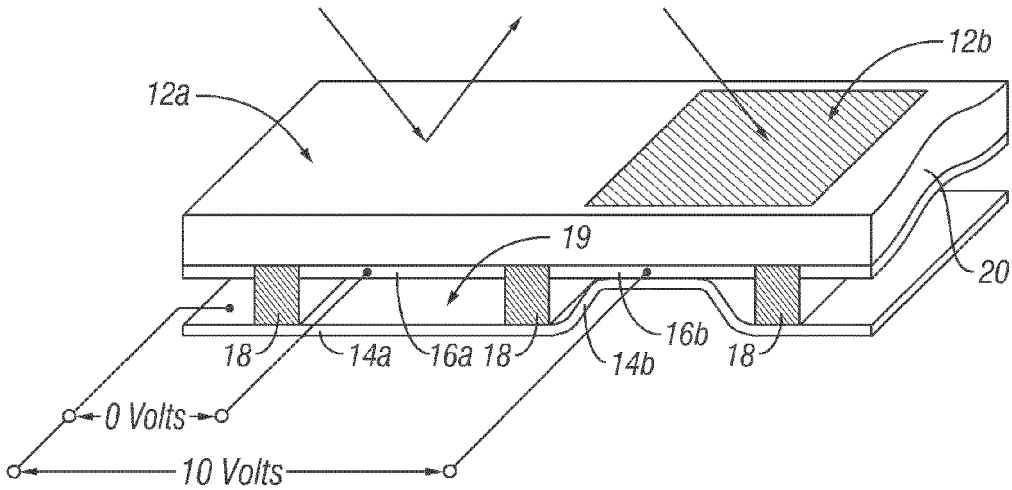
42 Claims, 12 Drawing Sheets